CINCON ELECTRONICS

# 33-700 WATTS BRICK
# DC-DC CONVERTER
# CATALOG 2019

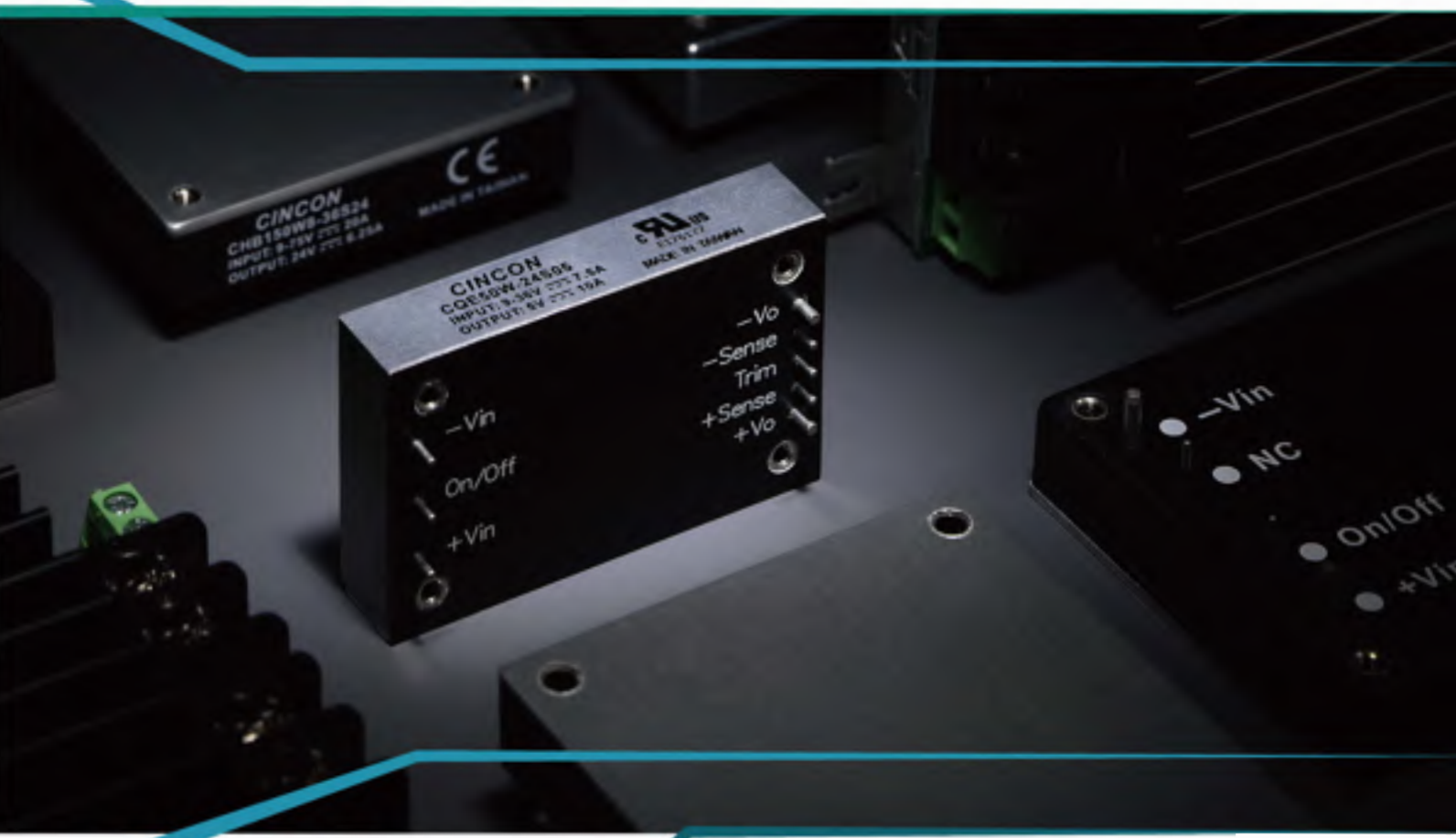

# CONTENTS


| | | | |
|---|---|---|---|
| QUICK SELECTION | | | 2 |
| CQE50W | 50W | | 4 |
| NEW CQB50W12 | 30-50W | | 6 |
| CQE60W-110S | 60W | | 8 |
| CQB75W | 75W | | 10 |
| NEW CQB75W8 | 75W | | 12 |
| CQB100W | 100W | | 14 |
| CQB100-110S | 100W | | 16 |
| NEW CQB100W-110S | 100W | | 18 |
| CQB150W | 150W | | 20 |
| CQB150W-110S | 150W | | 22 |
| CQB150-300S | 150W | | 24 |
| CHB50 | 50W | | 26 |
| CHB50W | 50W | | 28 |
| CHB75 | 75W | | 30 |
| CHB75W | 75W | | 32 |
| CHB75-Dual | 75W | | 34 |
| CHB100 | 100W | | 36 |
| CHB100-110S | 100W | | 38 |
| CHB100W | 100W | | 40 |
| CHE100W | 100W | | 42 |
| CHB150 | 150W | | 44 |
| CHB150W | 150W | | 46 |
| CHB150-110S | 150W | | 48 |
| CHB150W8 | 150W | | 50 |
| NEW CHB150W10 | 150W | | 52 |
| NRND CHB200 | 200W | | 54 |
| CHB200W | 200W | | 56 |
| NEW CHB200W-110 | 200W | | 58 |
| NEW CHB200W10 | 200W | | 60 |
| CHB300W | 300W | | 62 |
| CHB300W-110S | 300W | | 64 |
| CHB300-300S | 300W | | 66 |
| CHB350 | 350W | | 68 |
| NRND CFB200 | 200W | | 70 |
| CFB400W | 400W | | 72 |
| CFB600 | 600-700W | | 74 |
| NEW CFB600W-110S | 600W | | 76 |
| CFB600-300S | 600W | | 78 |
| NEW CFB750-300S | 750W | | 80 |
| CQB CHASSIS MOUNT&DIN-RAIL | 33-100W | | 82 |
| NEW CQB50W12-72S CMFC(D) | 30-50W | | 84 |
| NEW CQB150-300SXX-CMFC(D) | 150W | | 86 |
| NEW CQB150W-110SXX-CMFC(D) | 150W | | 88 |
| CHB CHASSIS MOUNT&DIN-RAIL | 33-100W | | 90 |
| NEW CHB300W-110SXX-CMFC(D) | 300W | | 92 |
| NEW CHB300-300SXX CMFC(D) | 300W | | 94 |
| NEW CHB600W-110SXX CMFD | 600W | | 96 |
| FM FILTER MODULE | 10-20A | | 98 |
| NEW FM30 | 30A | | 100 |
| NEW FM10D200P | 10A | | 102 |
| HEATSINK | | | 104 |
| SIPSMT05-05 | 5A | | 106 |
| SIPSMT05-12 | 5A | | 108 |
| SIPSMT10-05 | 10A | | 110 |
| SIPSMT10-12 | 10A | | 112 |
| SIPSMT10W-12 | 10A | | 114 |
| SIPSMT15-05 | 15A | | 116 |
| SIPSMT16-12 | 16A | | 118 |
| SIPSMT16W-12 | 16A | | 120 |
| SIP20W-12 | 20A | | 122 |
| Resquest for Quote 50W | | | 124 |

# QUICK SELECTION

| Input Voltage Range | Package | Output Voltage (V) and Max Power (W) | | | | | | | | | I/O Isolation | Series | Page |
|---|---|---|---|---|---|---|---|---|---|---|---|---|---|
| | | 3.3V | 5V | 12V | 15V | 24V | 28V | 32V | 36V | 48V | | | |
| 12 V (9 – 18 V) | Half Brick | 33W | 50W | 50W | 50W | 50W | | | | | 1500VDC | CHB50 | 26 |
| | Half Brick | 49.5W | 75W | 75W | 75W | 75W | | | | | 1500VDC | CHB75 | 30 |
| 24 V & 28 V (18 – 36 V) | Half Brick | 33W | 50W | 50W | 50W | 50W | | | | | 1500VDC | CHB50 | 26 |
| | Half Brick | 49.5W | 75W | 75W | 75W | 75W | | | | | 1500VDC | CHB75 | 30 |
| | Half Brick | 66W | 100W | 100W | 100W | 100W | | | | | 1500VDC | CHB100 | 36 |
| | Half Brick | 165W | 200W | 200W | | 200W | | | | 200W | 1500VDC | CHB200 | 54 |
| | Half Brick | 231W | 350W | 350W | | 350W | 350W | | | 350W | 1500VDC | CHB350 | 68 |
| | Full Brick | | | 600W | | 600W | 600W | 600W | | 600W | 1500VDC | CFB600 | 74 |
| 12, 24 & 28 V (9 – 36 V) | Quarter Brick | 33W | 50W | 50W | 50W | 50W | | | | 50W | 1500VDC | CQE50W | 4 |
| | Quarter Brick | 39.6W | 60W | 75W | 75W | 75W | | | | | 1500VDC | CQB75W | 10 |
| | Quarter Brick | 99W | 100W | 100W | 100W | 100W | | | | | 1500VDC | CQB100W | 14 |
| | Quarter Brick | | 150W | 150W | | 150W | 150W | | | 150W | 2250VDC | CQB150W | 20 |
| | Half Brick | 33W | 50W | 50W | 50W | 50W | 50W | | | 50W | 1500VDC | CHB50W | 28 |
| | Half Brick | 49.5W | 75W | 75W | 75W | 75W | 75W | | | 75W | 1500VDC | CHB75W | 32 |
| | Half Brick | 66W | 100W | 100W | 100W | 100W | 100W | | | 100W | 1500VDC | CHB100W | 40 |
| | Half Brick | 82.5W | 100W | 100W | 100W | 100W | | | | 100W | 1500VDC | CHE100W | 42 |
| | Half Brick | 99W | 150W | 150W | 150W | 150W | 150W | | | 150W | 1500VDC | CHB150W | 44 |
| | Half Brick | | 300W | 300W | 300W | 300W | 300W | | | 300W | 1500VDC | CHB300W | 62 |
| | Half Brick | | 400W | 400W | | 400W | 400W | | | 400W | 1500VDC | CFB400W | 72 |
| 12, 24 & 28 V (10 – 36 V) | Half Brick | 165W | 200W | 200W | 200W | 200W | | | | 200W | 1500VDC | CHB200W | 56 |
| 48 V (36 – 75 V) | Half Brick | 33W | 50W | 50W | 50W | 50W | | | | | 1500VDC | CHB50 | 26 |
| | Half Brick | 49.5W | 75W | 75W | 75W | 75W | | | | | 1500VDC | CHB75 | 30 |
| | Half Brick | 66W | 100W | 100W | 100W | 100W | | | | | 1500VDC | CHB100 | 36 |
| | Half Brick | 99W | 150W | 150W | 150W | 150W | | | | | 1500VDC | CHB150 | 44 |
| | Half Brick | 165W | 200W | 200W | | 200W | | | | 200W | 1500VDC | CHB200 | 54 |
| | Half Brick | 231W | 350W | 350W | | 350W | 350W | | | | 1500VDC | CHB350 | 68 |
| | Full Brick | | | 600W | | 600W | 700W | 600W | | 600W | 1500VDC | CFB600 | 74 |

***Modified Product Support***

*Recognizing the requirements for matching standard products to unique applications, Cincon is dedicated to provide support for customers requiring additional features or modification to catalog products.*

| Input Voltage Range | Package | Output Voltage (V) and Max Power (W) | | | | | | | | | I/O Isolation | Series | Page |
|---|---|---|---|---|---|---|---|---|---|---|---|---|---|
| | | 3.3V | 5V | 12V | 15V | 24V | 28V | 32V | 36V | 48V | | | |
| 24, 28 & 48 V (18 – 75 V) | Quarter Brick | 33W | 50W | 50W | 50W | 50W | | | | 50W | 1500VDC | CQE50W | 4 |
| | Quarter Brick | 39.6W | 60W | 75W | 75W | 75W | | | | | 1500VDC | CQB75W | 10 |
| | Quarter Brick | 99W | 100W | 100W | 100W | 100W | | | | | 1500VDC | CQB100W | 12 |
| | Quarter Brick | | 150W | 150W | | 150W | 150W | | | 150W | 2250VDC | CQB150W | 20 |
| | Half Brick | 33W | 50W | 50W | 50W | 50W | 50W | | | 50W | 1500VDC | CHB50W | 28 |
| | Half Brick | 49.5W | 75W | 75W | 75W | 75W | 75W | | | 75W | 1500VDC | CHB75W | 32 |
| | Half Brick | 66W | 100W | 100W | 100W | 100W | 100W | | | 100W | 1500VDC | CHB100W | 40 |
| | Half Brick | 82.5W | 100W | 100W | 100W | 100W | | | | 100W | 1500VDC | CHE100W | 42 |
| | Half Brick | 99W | 150W | 150W | 150W | 150W | 150W | | | 150W | 1500VDC | CHB150W | 44 |
| | Half Brick | 165W | 200W | 200W | 200W | 200W | | | | 200W | 1500VDC | CHB200W | 56 |
| | Half Brick | | 300W | 300W | | 300W | 300W | | | 300W | 1500VDC | CHB300W | 62 |
| | Full Brick | | 400W | 400W | | 400W | 400W | | | 400W | 1500VDC | CFB400W | 72 |
| 12, 24, 28, 36 & 48 V ( 9 to 75 V ) | Quarter Brick | | | 75W | 75W | 75W | 75W | | | 75W | 3000VAC | CQB75W8-36 | 12 |
| | Half Brick | | | 150W | 150W | 150W | 150W | | | 150W | 1500VDC | CHB150W8 | 50 |
| 72, 96 &110 V (43 – 160 V) | Quarter Brick | | 60W | 60W | 60W | 60W | 60W | | | 60W | 3000VDC | CQB60W-110S | 8 |
| | Quarter Brick | | 100W | 100W | | 100W | 100W | | | 100W | 3000VDC | CQB100W-110S | 18 |
| | Quarter Brick | 99W | 150W | 150W | | 150W | 150W | | | 150W | 3000VDC | CQB150W-110S | 22 |
| | Half Brick | | 200W | 200W | | 200W | 200W | | | 200W | 3000VDC | CHB200W-110S | 58 |
| | Half Bricks | 198W | 300W | 300W | | 300W | 300W | | | 300W | 3000VDC | CHB300W-110S | 64 |
| | Full Brick | | | 600W | | 600W | 600W | | | 600W | 2250VDC | CFB600W-110S | 76 |
| 24, 28, 36, 48, 72, 96 &110 V (14-160V) | Quarter Brick | | 30W | 50W | | 50W | | | | 50W | 3000VDC | CQB50W12 | 6 |
| 24, 28, 36, 48, 72, 96 &110 V (14.5-140V) | Half Brick | | 150W | 150W | 150W | 150W | | | | 150W | 3000VAC | CHB150W10 | 52 |
| | Half Brick | | 200W | 200W | 200W | 200W | | | | 200W | 3000VAC | CHB200W10 | 60 |
| 110 V (66 – 160 V) | Quarter Brick | 82.5W | 100W | 100W | | 100W | | | | | 2250VDC | CQB100-110S | 16 |
| | Half Brick | | | 100W | 100W | 100W | | | | 100W | 3000VAC | CHB100-110S | 38 |
| | Half Brick | | 150W | 150W | | 150W | | | | | 2250VDC | CHB150-110S | 48 |
| 300 V (180 – 425 V) | Quarter Brick | | 150W | 150W | 150W | 150W | 150W | | | 150W | 3000VAC | CQB150-300S | 24 |
| | Half Brick | | 300W | 300W | | 300W | 300W | | | 300W | 3000VAC | CHB300-300S | 66 |
| | Full Brick | | | 600W | | 600W | 600W | | | | 3000VAC | CFB600-300S | 78 |
| | Full Brick | | | 750W | 750W | 750W | 750W | | 750W | 750W | 3000VAC | CFB750-300S | 80 |

# CQE50W SERIES
## 50 WATT, 4:1 INPUT RANGE

### Features

- 50W Isolated Output
- No Tantalum Capacitor Inside
- Quarter-Brick Size, Six-Sided Shield Metal Case
- High Efficiency up to 92%
- 300KHz Switching Frequency
- 4 : 1 Input Range
- Regulated Outputs
- Continuous Short Circuit Protection
- Full Load Operation up to 80˚C
  with Heat-Sink M-C421 Natural Convention
- Over Temperature/Voltage/Current Protection
- Safety Meets UL60950-1, EN60950-1, and IEC60950-1

### Mechanical Dimensions

ll Dimensions in Inches (mm)
lerance Inches: X.XX=±0.02 , X.XXX=±0.010
Millimeters: X.X=±0.5 , X.XX=±0.25

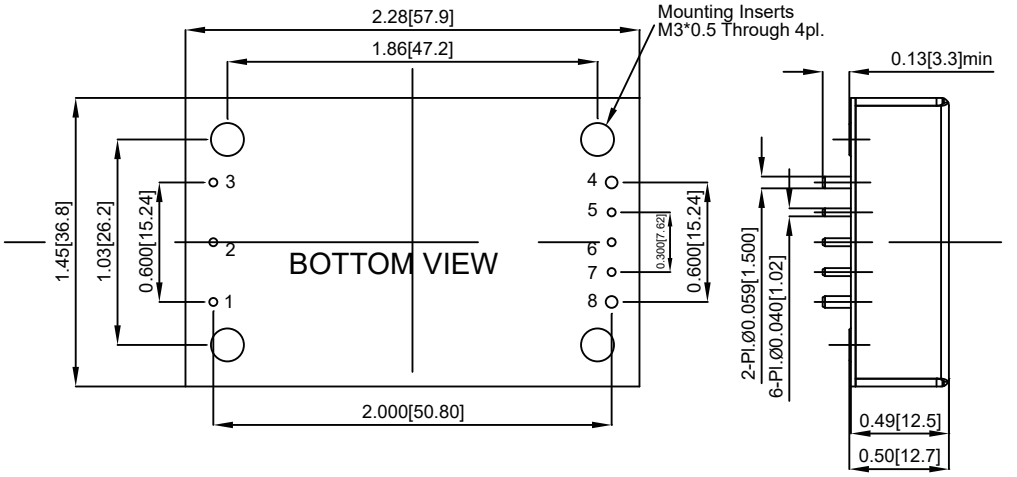


| PIN CONNECTION | |
|---|---|
| PIN | Single Output |
| 1 | +V Input |
| 2 | On/Off |
| 3 | -V Input |
| 4 | -V Output |
| 5 | -Sense |
| 6 | Trim |
| 7 | +Sense |
| 8 | +V Output |

| MODEL NUMBER | INPUT VOLTAGE | OUTPUT VOLTAGE | OUTPUT CURRENT MIN. | OUTPUT CURRENT MAX. | INPUT CURRENT NO LOAD | INPUT CURRENT FULL LOAD | % EFF. (2) | % EFF. (3) | CAPACITOR LOAD MAX. |
|---|---|---|---|---|---|---|---|---|---|
| CQE50W-24S3V3 | 9-36 VDC | 3.3 VDC | 0 mA | 10 A | 100 mA | 1528 mA | 90 | 90.5 | 10000µF |
| CQE50W-24S05 | 9-36 VDC | 5 VDC | 0 mA | 10 A | 100 mA | 2277 mA | 91 | 91.5 | 10000µF |
| CQE50W-24S12 | 9-36 VDC | 12 VDC | 0 mA | 4.16 A | 100 mA | 2261 mA | 91 | 91.5 | 4160µF |
| CQE50W-24S15 | 9-36 VDC | 15 VDC | 0 mA | 3.33 A | 100 mA | 2287 mA | 91.5 | 91.5 | 3330µF |
| CQE50W-24S24 | 9-36 VDC | 24 VDC | 0 mA | 2.08 A | 60 mA | 2311 mA | 90 | 90 | 2080µF |
| CQE50W-24S48 | 9-36 VDC | 48 VDC | 0 mA | 1.04 A | 60 mA | 2311 mA | 88.5 | 88.5 | 1040µF(4) |
| CQE50W-48S3V3 | 18-75 VDC | 3.3 VDC | 0 mA | 10 A | 60 mA | 764 mA | 90 | 90 | 10000µF |
| CQE50W-48S05 | 18-75 VDC | 5 VDC | 0 mA | 10 A | 60 mA | 1132 mA | 91.5 | 92 | 10000µF |
| CQE50W-48S12 | 18-75 VDC | 12 VDC | 0 mA | 4.16 A | 60 mA | 1130 mA | 92 | 92 | 4160µF |
| CQE50W-48S15 | 18-75 VDC | 15 VDC | 0 mA | 3.33 A | 60 mA | 1144 mA | 91 | 91 | 3330µF |
| CQE50W-48S24 | 18-75 VDC | 24 VDC | 0 mA | 2.08 A | 60 mA | 1156 mA | 91 | 90.5 | 2080µF |
| CQE50W-48S48 | 18-75 VDC | 48 VDC | 0 mA | 1.04 A | 60 mA | 1156 mA | 89 | 89 | 1040µF(4) |

NOTE:
1. Nominal Input Voltage 24, 48VDC
2. Measured at 12VDC for 24SXX, 24VDC for 48SXX
3. Measured at Nominal Input Voltage
4. Require a 10uF Aluminum Capacitor Connected Between +Vout and –Vout for 48Vout Models

## Remote On/Off Control

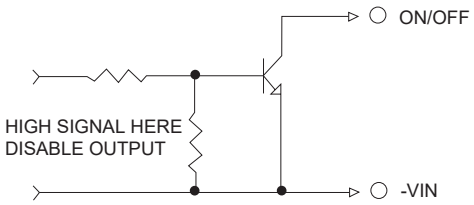


## External Output Trim

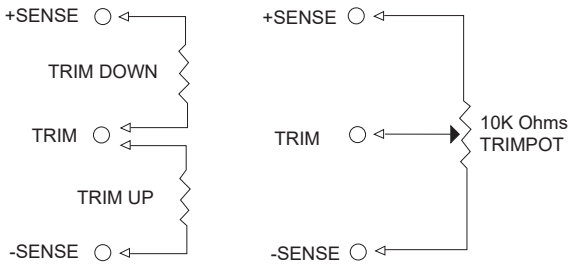


## Derating Curve

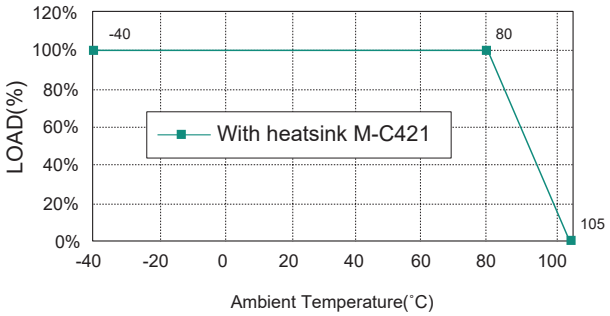


## Specifications

All Specifications Typical At Nominal Line, Full Load, and 25˚C Unless Otherwise Noted

### INPUT SPECIFICATIONS

| | | |
|---|---|---|
| Input Voltage Range | | 24V ..... 9-36V |
| | | 48V..... 18-75V |
| Input Surge Voltage (100ms max.) | | 24V ..... 50Vdc max. |
| | | 48V ..... 100Vdc max. |
| Under voltage lockout | 24Vin | power up ..... 8.8V |
| | | power down ..... 8.0V |
| | 48Vin | power up ..... 17V |
| | | power down ..... 16V |
| Positive Logic Remote On/Off | | See note 4 & 5 |
| Input Filter | | PI Type |

### OUTPUT SPECIFICATIONS

| | |
|---|---|
| Voltage Accuracy: | ±1.5% max. |
| Transient Response: 75% to 100% Step Load Change | |
| Error Band | ±5% Vout |
| Recover Time | < 500µs |
| External Trim Adj. Range | ±10% |
| Ripple & Noise, 20MHz BW ( see note 3) | |
| 3.3V & 5V | 40mV RMS, 100mV pk-pk max. |
| 12V & 15V | 60mV RMS, 150mV pk-pk max. |
| 24V | 100mV RMS, 240mV pk-pk max. |
| 48V | 200mV RMS, 480mV pk-pk max. |
| Temperature Coefficient | ±0.03%/°C |
| Short Circuit Protection | Continuous |
| Line Regulation (note 1) | ±0.2% max. |
| Load Regulation (note 2) | ±0.2% max. |
| Over Voltage Protection trip Range, % Vo nom. | 115-140% |
| Current Limit | 110%-165% Nominal Output |
| Start up time | 20ms typ. |

### GENERAL SPECIFICATIONS

| | |
|---|---|
| Efficiency | See Table |
| Isolation Voltage | Input/Output ..... 1500VDC min. |
| | Input/Case ..... 1500VDC min. |
| | Output/Case ..... 1500VDC min. |
| Isolation Resistance | $10^7$ ohm min. |
| Isolation Capacitance | 1000pF typ |
| Switching Frequency | 300KHz typ. |
| Operating Case Temperature | -40˚C to 105˚C |
| Storage Temperature | -55˚C to +125˚C |
| Thermal Shutdown, Case Temp. | 110˚C typ. |
| Humidity | 95% RH max. Non condensing |
| MTBF ... MIL-HDBK-217F, GB, 25˚C, Full Load | XXS24, XXS48 .... 800Khrs typ. |
| | Others ..... 600Khrs typ. |
| Dimensions | 1.45 x 2.28 x 0.50 inches |
| | (36.8 x 57.9 x 12.7 mm) |
| Case Material | Aluminum with Non-Conducted Base |
| Weight | 63 g |

### NOTE

1. Measured from high line to low line.
2. Measured from full load to zero load.
3. Output ripple and noise measured with 10µF aluminum and 1µF ceramic capacitor across output for 48Vout and with 10µF tantalum and 1µF ceramic capacitor for others.
4. Logic compatibility ..... open collector ref to -Input
   - Module On ..... >3.5VDC to 75VDC or open circuit
   - Module Off ..... < 1.2VDC
5. Suffix "N" to the model number with negative logic remote On/Off
   - Module On ..... < 1.2VDC
   - Module Off ..... >3.5VDC to 75VDC or open circuit

# CQB50W12 SERIES
## 30-50 WATT 12:1 INPUT DC-DC CONVERTERS

### Features

- 30-50W Isolated Output
- Efficiency to 89%
- Fixed Switching Frequency
- 12:1 Input Range
- Regulated Outputs
- Remote On/Off
- Low No Load Power Consumption
- Over Temperature Protection
- Over Voltage/Current Protection
- Continuous Short Circuit Protection
- Quarter Brick Size Meet Industrial Standard
- UL60950-1 2nd(Basic Insulation) Approval
- CB Test Certificate IEC60950-1
- Meet EN50155 with External Circuits
- Shock & Vibration Meets EN50155 (EN61373)
- Fire & Smoke Meet EN45545-2
- 5000m Operating Altitude

### Mechanical Dimensions

All Dimensions In Inches(mm)
Tolerances Inches: X.XX= ±0.02 , X.XXX= ±0.010
Millimeters: X.X= ±0.5 , X.XX=±0.25

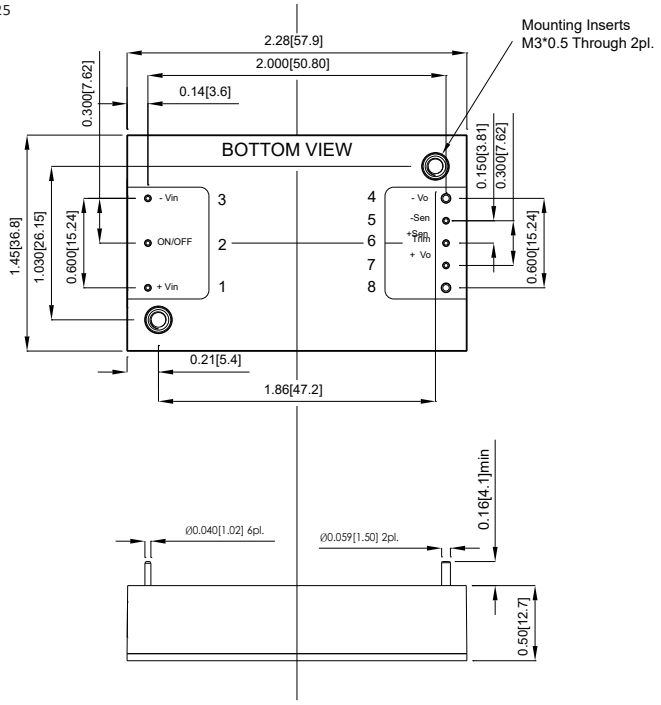


| PIN CONNECTION | |
|---|---|
| PIN | Function |
| 1 | +V Input |
| 2 | On/Off |
| 3 | -V Input |
| 4 | -V Output |
| 5 | -Sense |
| 6 | Trim |
| 7 | +Sense |
| 8 | +V Output |

| MODEL NUMBER | INPUT VOLTAGE | OUTPUT VOLTAGE | OUTPUT CURRENT MIN. | OUTPUT CURRENT MAX. | INPUT CURRENT NO LOAD | INPUT CURRENT FULL LOAD | % EFF. (1) | % EFF. (2) | CAPACITOR LOAD MAX. |
|---|---|---|---|---|---|---|---|---|---|
| CQB50W12-72S05 | 14-160 VDC | 5 VDC | 0 mA | 6.0 A | 5 mA | 530 mA | 83 | 81 | 10000μF |
| CQB50W12-72S12 | 14-160 VDC | 12 VDC | 0 mA | 4.2 A | 5 mA | 810 mA | 87 | 86 | 6800μF |
| CQB50W12-72S24 | 14-160 VDC | 24 VDC | 0 mA | 2.1 A | 5 mA | 810 mA | 89 | 87 | 3300μF |
| CQB50W12-72S48 | 14-160 VDC | 48 VDC | 0 mA | 1.05 A | 8 mA | 810 mA | 88 | 85 | 680μF |

NOTE:
1. Nominal Input Voltage 72 VDC
2. Measured at 110Vin

## Remote On/Off Control

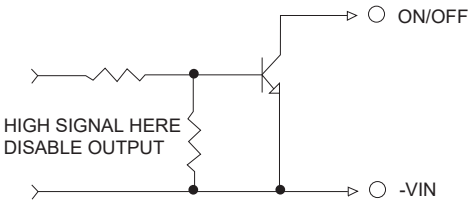


## External Output Trim

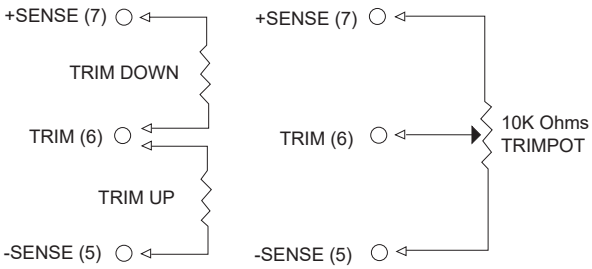


## Specifications

All Specifications Typical At Nominal Line, Full Load, and 25˚C Unless Otherwise Noted

### INPUT SPECIFICATIONS

| | |
|---|---|
| Input Voltage Range | 72V ..... 14-160V |
| Input Surge Voltage (100ms max.) | 200Vdc max. |
| Under voltage lockout | power up ..... 14.6V |
| | power down ..... 12.0V |
| Positive Logic Remote On/Off | See note 4 & 5 |
| Input Filter | PI Type |

### OUTPUT SPECIFICATIONS

| | |
|---|---|
| Voltage Accuracy: | ±1.0% max. |
| Transient Response: 25% Step Load Change | <250µs |
| External Trim Adj. Range | -20%, +10% |
| Ripple & Noise, 20MHz BW ( see note 3) | 40mV RMS, 100mV pk-pk max. |
| Temperature Coefficient | ±0.02%/°C |
| Short Circuit Protection | Continuous |
| Line Regulation (note 1) | ±0.2% max. |
| Load Regulation (note 2) | ±0.2% max. |
| Over Voltage Protection trip Range, % Vo nom. | 115-140% |
| Current Limit | 110%-220% Nominal |
| | Output |
| Start up time | 30ms typ. |

### GENERAL SPECIFICATIONS

| | |
|---|---|
| Efficiency | See Table |
| Isolation Voltage | Input/Output ..... 3000VDC min. |
| | Input/Case ..... 2500VDC min. |
| | Output/Case ..... 500VAC min. |
| Isolation Resistance | $2x10^8$ ohm min. |
| Isolation Capacitance | 1000pF typ |
| Switching Frequency | 240KHz typ. |
| Operating Case Temperature | -40˚C to 100˚C |
| Storage Temperature | -55˚C to +125˚C |
| Thermal Shutdown, Case Temp. | 110˚C typ. |
| Humidity | 95% RH max. Non condensing |
| Operating Altitude | 5000m |
| MTBF ... MIL-HDBK-217F, GB, 25˚C, Full Load | 780Khrs typ. |
| Safety | UL60950-1 2nd (Basic insulation) |
| EMC (note 8) | EN50155 (EN50121-3-2) |
| | with External Flter |
| Shock/Vibration | EN50155 (EN61373) |
| Environmental | EN50155 (EN60068-2-1) |
| Fire & Smoke | EN45545-2 |
| Dimensions | 2.28 x 1.45 x 0.50 inches |
| | (57.9 x 36.8 x 12.7 mm) |
| Case Material | Aluminum Baseplate with Plastic Case |
| Weight | 61.5 g |

### NOTE

1. Measured from high line to low line.
2. Measured from full load to zero load.
3. Output ripple and noise measured with 22uF aluminum solid capacitor and 1uF ceramic capacitor across output.
4. Logic compatibility ..... open collector ref to -Input
   Module on..... > 3.5VDC to 160VDC or open circuit
   Module off ..... 0 to <1.2 VDC
5. Suffix "N" to the model number with negative logic remote on/off
   Module on ..... 0 to <1.2 VDC
   Module off ..... >4.0VDC to 160VDC or open circuit
6. Suffix “-C” to the model number with clear mounting insert (3.2mm DIA.)
7. An external input capacitor 68uF for all models are recommended to reduce input ripple voltage
8. For information about EN50155 and RIA12, refer to application note.

# CQB60W-110S SERIES
## 60 WATT, INPUT RANGE 43-160 VDC

### Features

- 60W Isolated Output
- Efficiency to 92%
- Low No Load Power Consumption
- 4 : 1 Input Range
- Regulated Outputs
- Remote On/Off
- Over Temperature/Voltage/Current Protection
- Continuous Short Circuit Protection
- Quarter Brick Size Meets Industrial Standard
- UL60950-1 (Basic Insulation) Approval
- Meets EN50155 with External Circuits
- Shock & Vibration: EN 50155 (EN 61373)
- Fire & Smoke Meets EN45545-2
- 4000m Operating Altitude

E176177

Railway System

### Mechanical Dimensions

All Dimensions in Inches (mm)
Tolerance Inches: X.XX=±0.02 , X.XXX=±0.010
Millimeters: X.X=±0.5 , X.XX=±0.25

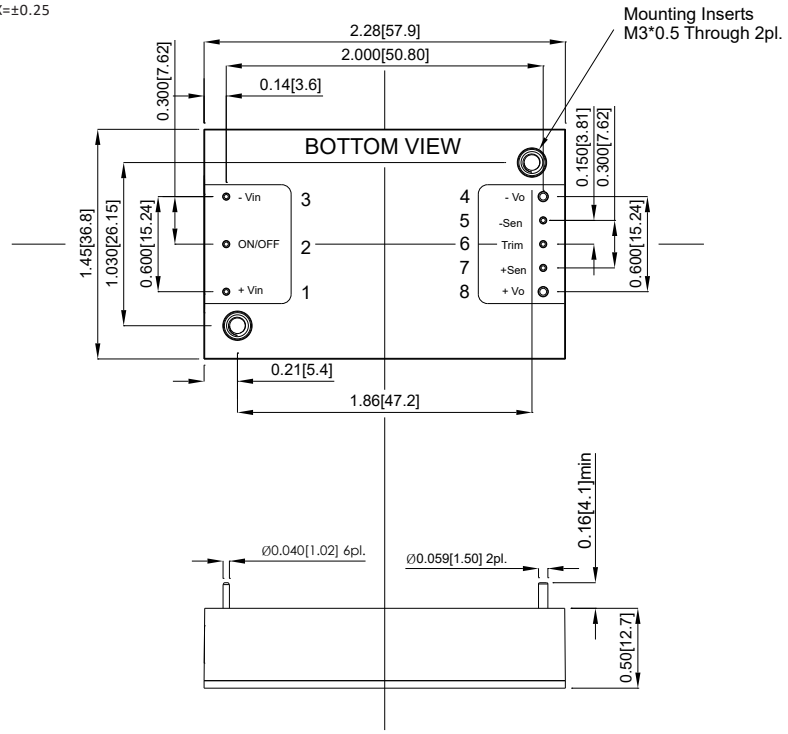


| PIN CONNECTION | |
|---|---|
| PIN | Single Output |
| 1 | +V Input |
| 2 | On/Off |
| 3 | -V Input |
| 4 | -V Output |
| 5 | -Sense |
| 6 | Trim |
| 7 | +Sense |
| 8 | +V Output |

| MODEL NUMBER | INPUT VOLTAGE | OUTPUT VOLTAGE | OUTPUT CURRENT | | INPUT CURRENT | | % EFF. | CAPACITOR LOAD MAX. |
|---|---|---|---|---|---|---|---|---|
| | | | MIN. | MAX. | NO LOAD | FULL LOAD | | |
| CQB60W-110S05 | 43-160 VDC | 5 VDC | 0 mA | 12 A | 5 mA | 600 mA | 91 | 6800μF |
| CQB60W-110S12 | 43-160 VDC | 12 VDC | 0 mA | 5 A | 5 mA | 593 mA | 92 | 3300μF |
| CQB60W-110S15 | 43-160 VDC | 15 VDC | 0 mA | 4 A | 5 mA | 606 mA | 90 | 3300μF |
| CQB60W-110S24 | 43-160 VDC | 24 VDC | 0 mA | 2.5 A | 5 mA | 606 mA | 90 | 1200μF |
| CQB60W-110S28 | 43-160 VDC | 28 VDC | 0 mA | 2.14 A | 5 mA | 606 mA | 90 | 1200μF |
| CQB60W-110S48 | 43-160 VDC | 48 VDC | 0 mA | 1.25 A | 5 mA | 613 mA | 89 | 470μF |

## Remote On/Off Control

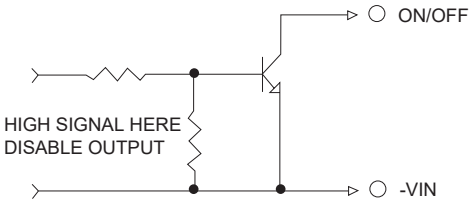


## External Output Trim

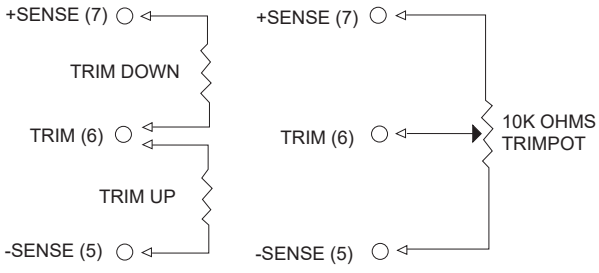


## Specifications

All Specifications Typical At Nominal Line, Full Load, and 25˚C Unless Otherwise Noted

### INPUT SPECIFICATIONS

| | |
|---|---|
| Input Voltage Range | 110V, 43-160V |
| Input Surge Voltage (100ms max.) | 180Vdc max. |
| Under Voltage Lockout | Power up..... 42V |
| | Power down... 38V |
| Positive Logic Remote On/Off | See note 4 & 5 |
| Input Filter | PI Type |

### OUTPUT SPECIFICATIONS

| | |
|---|---|
| Voltage Accuracy | ±1.0% max. |
| Transient Response: | |
| 25% Step Load Change | < 250µs |
| External Trim Adj. Range | ±10% |
| Ripple & Noise, 20MHz BW (note 3) | |
| 5V | 40mV RMS, 100mV pk-pk max. |
| 12V/15V | 60mV RMS, 150mV pk-pk max. |
| 24V/28V | 100mV RMS, 240mV pk-pk max. |
| 48V | 200mV RMS, 480mV pk-pk max. |
| Temperature Coefficient | ±0.03%/°C |
| Short Circuit Protection | Continuous |
| Line Regulation (note 1) | ±0.2% max. |
| Load Regulation (note 2) | ±0.2% max. |
| Over Voltage Protection trip Range, % Vo nom | 115-140% |
| Current Limit | 110%-165% Nominal Output |
| Start up time | 15ms typ. |

### GENERAL SPECIFICATIONS

| | |
|---|---|
| Efficiency | See Table |
| Isolation Voltage | Input/Output .....3000VDC min. |
| | Input/Case .....3000VDC min. |
| | Output/Case .....1500VDC min. |
| Isolation Resistance | $10^7$ ohm min. |
| Isolation Capacitance | 1000pF typ. |
| Switching Frequency | 200KHz typ. |
| Operating Case Temperature | -40˚C to +100˚C |
| Storage Temperature | -55˚C to +105˚C |
| Thermal Shutdown, Case Temp | 110˚C typ. |
| Humidity | 95% RH max. Non condensing |
| Operating Altitude | 4000m |
| MTBF | MIL-HDBK-217F, GB, 25˚C, Full Load 650Khrs typ |
| Safety | UL60950-1 2nd (Basic insulation) |
| EMI | EN50155 (EN50121-3-2) with external filter |
| Shock/Vibration | EN50155 (EN61373) |
| Dimensions | 2.28 × 1.45 x 0.50 inches (57.9 x 36.8 × 12.7 mm) |
| Case Material | Aluminum Baseplate with Plastic Case |
| Weight | 61.5 g |

### NOTE

1. Measured from high line to low line.
2. Measured from full load to zero load.
3. Output ripple and noise measured with 10µF tantalum and 1µF ceramic capacitor across output.
4. Logic compatibility ..... open collector ref to -Input
   Module On..... > 3.5VDC to 75VDC or open circuit
   Module Off ..... < 1.2VDC
5. Suffix "N" to the model number with negative logic remote On/Off
   Module On ..... < 1.2VDC
   Module Off ..... >3.5VDC to 75VDC or open circuit
6. Suffix "-C" to the model number with clear mounting Insert (3.2mm DIA.)
7. An external input capacitor 68µF for all models are recommended to reduce input ripple voltage.
8. Design to meet EN50155 and RIA12 refer to application note.

# CQB75W SERIES
## 75 WATT, 4:1 INPUT RANGE

### Features

- 75W Isolated Output
- Efficiency up to 87%
- Fixed Switching Frequency
- 4 : 1 Input Range
- Regulated Outputs
- Continuous Short Circuit Protection
- Industry Standard Quarter-Brick Package
- UL60950-1 2nd Approval

E176177

### Mechanical Dimensions

All Dimensions in Inches (mm)
Tolerance Inches: X.XX=±0.02 , X.XXX=±0.010
Millimeters: X.X=±0.5 , X.XX=±0.25

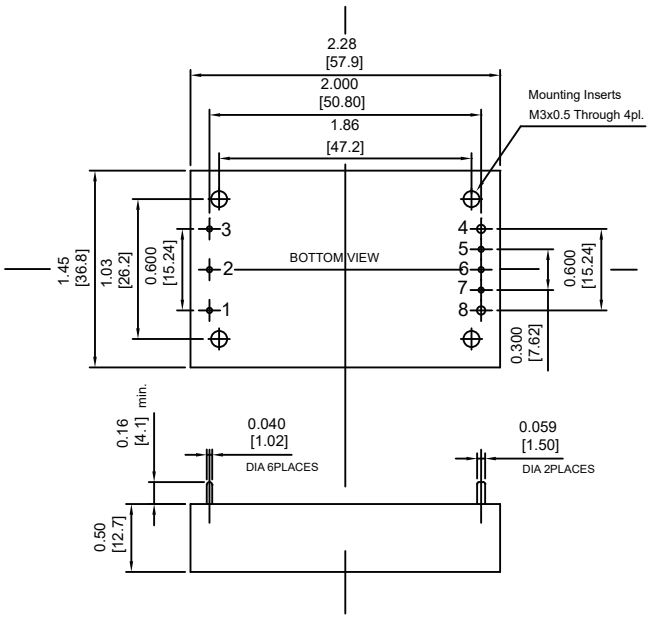


| PIN CONNECTION | |
|---|---|
| PIN | Single Output |
| 1 | +V Input |
| 2 | On/Off |
| 3 | -V Input |
| 4 | -V Output |
| 5 | -Sense |
| 6 | Trim |
| 7 | +Sense |
| 8 | +V Output |

| MODEL NUMBER | INPUT VOLTAGE | OUTPUT VOLTAGE | OUTPUT CURRENT MIN. | OUTPUT CURRENT MAX. | INPUT CURRENT NO LOAD | INPUT CURRENT FULL LOAD | % EFF. | CAPACITOR LOAD MAX. |
|---|---|---|---|---|---|---|---|---|
| CQB75W-24S3V3 | 9-36 VDC | 3.3 VDC | 0 mA | 12 A | 50 mA | 2037 mA | 81 | 12000µF |
| CQB75W-24S05 | 9-36 VDC | 5 VDC | 0 mA | 12 A | 50 mA | 2976 mA | 84 | 12000µF |
| CQB75W-24S12 | 9-36 VDC | 12 VDC | 0 mA | 6.25 A | 50 mA | 3634 mA | 86 | 6250µF |
| CQB75W-24S15 | 9-36 VDC | 15 VDC | 0 mA | 5 A | 50 mA | 3634 mA | 86 | 4400µF |
| CQB75W-24S24 | 9-36 VDC | 24 VDC | 0 mA | 3.12 A | 50 mA | 3628 mA | 86 | 1500µF |
| CQB75W-48S3V3 | 18-75 VDC | 3.3 VDC | 0 mA | 12 A | 30 mA | 1006 mA | 82 | 12000µF |
| CQB75W-48S05 | 18-75 VDC | 5 VDC | 0 mA | 12 A | 30 mA | 1471 mA | 85 | 12000µF |
| CQB75W-48S12 | 18-75 VDC | 12 VDC | 0 mA | 6.25 A | 30 mA | 1817 mA | 86 | 6250µF |
| CQB75W-48S15 | 18-75 VDC | 15 VDC | 0 mA | 5 A | 30 mA | 1796 mA | 87 | 4400µF |
| CQB75W-48S24 | 18-75 VDC | 24 VDC | 0 mA | 3.12 A | 30 mA | 1796 mA | 87 | 1500µF |

## External Output Trim

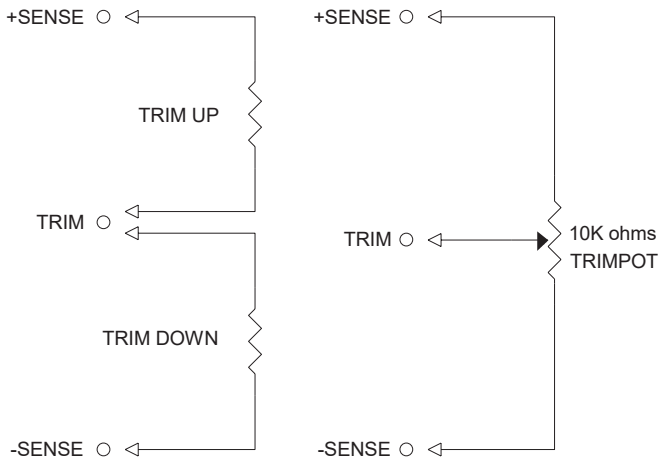


## Specifications

All Specifications Typical At Nominal Line, Full Load, and 25˚C Unless Otherwise Noted

### INPUT SPECIFICATIONS

| | | |
|---|---|---|
| Input Voltage Range | | 24V..... 9-36V |
| | | 48V..... 18-75V |
| Input Surge Voltage (100ms max.) | | 24V ..... 50Vdc max. |
| | | 48V ..... 100Vdc max. |
| Under voltage lockout | 24Vin | power up ..... 8.8V |
| | | power down ..... 8.0V |
| | 48Vin | power up ..... 17V |
| | | power down ..... 16V |
| Positive Logic Remote On/Off | | See note 4 & 5 |
| Input Filter | | PI Type |

### OUTPUT SPECIFICATIONS

| | |
|---|---|
| Voltage Accuracy: | ±1.0%max.<br>24(48)S33:±1.5% max. |
| Transient Response : 75% to 100% Step Load Change | |
| Error Band | ±5% Vout |
| Recover Time | < 500µs |
| External Trim Adj. Range | ±10%˚C |
| Ripple & Noise, 20MHz BW (note 3) | |
| 3.3V & 5V | 40mV RMS, max. |
| | 100mV pk-pk, max. |
| 12V & 15V | 60mV RMS, max. |
| | 150mV pk-pk, max. |
| 24V | 100mV RMS, max. |
| | 240mV pk-pk, max. |
| Temperature Coefficient | ±0.03%/°C |
| Short Circuit Protection | Continuous |
| Line Regulation (note 1) | ±0.2% max. |
| Load Regulation (note 2) | ±0.2% max. |
| Over Voltage Protection trip Range ,% Vo nom. | 115-140% |
| Current Limit | 110%-140% Nominal Output |
| Start up time | 20ms typ. |

### GENERAL SPECIFICATIONS

| | |
|---|---|
| Efficiency | See Table |
| Isolation Voltage | Input/Output ..... 1500VDC min. |
| | Input/Case .....1500VDC min. |
| | Output/Case ..... 1500VDC min. |
| Isolation Resistance | $10^7$ ohm min. |
| Isolation Capacitance | 1000pF Typ. |
| Switching Frequency | 300KHz, Typ. |
| Operating Case Temperature Storage | -40˚C to 100˚C |
| Temperature | -55˚C to +105˚C |
| Humidity | 95% RH max. Non condensing |
| MTBF | MIL-HDBK-217F, GB, 25˚C, Full Load<br>850Khrs typ. |
| Thermal Shutdown, Case Temp. | - 105˚C Typ. |
| Dimensions | 1.45 x 2.28 x 0.50 inches<br>(36.8 x 57.9 x 12.7 mm) |
| Case Material | Aluminum Base-plate with Plastic Case |
| Weight | 63 g |

### NOTE

1. Measured from high line to low line.
2. Measured from full load to zero load.
3. Output ripple and noise measured with 10µF tantalum and 1µF ceramic capacitor across output.
4. Logic compatibility ..... open collector ref to -Input
   Module On ..... >3.5VDC to 75VDC or open circuit
   Module Off ..... 0 to < 1.8Vdc
5. Suffix "N" to the model number with negative logic remote On/Off
   Module On ..... 0 to < 1.8Vdc
   Module Off ..... >3.5VDC to 75Vdc or open circuit
6. Suffix "-C" to the model number with clear mounting Insert (3.1mm DIA.)

# CQB75W8 SERIES
## 75 WATT 8:1 INPUT DC-DC CONVERTERS

### Features

**PRELIMINARY**

- 75W Isolated Output
- Efficiency to 90%
- Fixed Switching Frequency
- 8:1 Input Range
- Regulated Outputs
- Remote On/Off
- Low No Load Power Consumption
- Over Temperature Protection
- Over Voltage/Current Protection
- Continuous Short Circuit Protection
- Quarter Brick Size Meet Industrial Standard
- Safety Meet UL62368 (Reinforced Insulation)
- Meet EN50155 with External Circuits
- Shock & Vibration Meet EN50155 (EN61373)
- Fire & Smoke Meet EN45545-2
- 3000m Operating Altitude

### Mechanical Dimensions

All Dimensions In Inches(mm)
Tolerances Inches: X.XX= ±0.02 , X.XXX= ±0.010
Millimeters: X.X= ±0.5 , X.XX=±0.25

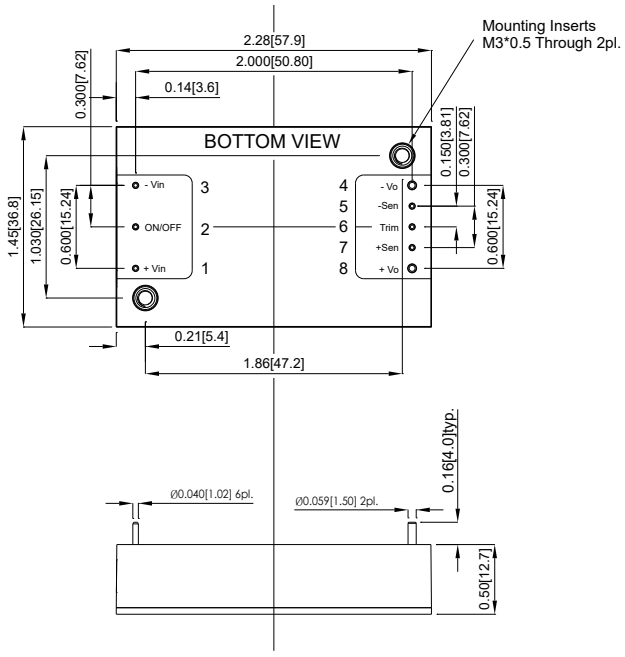


| PIN CONNECTION | |
|---|---|
| PIN | Function |
| 1 | +V Input |
| 2 | On/Off |
| 3 | -V Input |
| 4 | -V Output |
| 5 | -Sense |
| 6 | Trim |
| 7 | +Sense |
| 8 | +V Output |

| MODEL NUMBER | INPUT VOLTAGE | OUTPUT VOLTAGE | OUTPUT CURRENT MIN. | OUTPUT CURRENT MAX. | INPUT CURRENT NO LOAD | INPUT CURRENT FULL LOAD | % EFF. (1) | % EFF. (2) | CAPACITOR LOAD MAX. |
|---|---|---|---|---|---|---|---|---|---|
| CQB75W8-36S12 | 9-75 VDC | 12 VDC | 0 mA | 6.25 A | 10 mA | 2367 mA | 88 | 88 | 6250μF |
| CQB75W8-36S15 | 9-75 VDC | 15 VDC | 0 mA | 5.0 A | 10 mA | 2341 mA | 89 | 89 | 5000μF |
| CQB75W8-36S24 | 9-75 VDC | 24 VDC | 0 mA | 3.12 A | 10 mA | 2311 mA | 90 | 90 | 3120μF |
| CQB75W8-36S28 | 9-75 VDC | 28 VDC | 0 mA | 2.67 A | 10 mA | 2307 mA | 90 | 90 | 2670μF |
| CQB75W8-36S48 | 9-75 VDC | 48 VDC | 0 mA | 1.56 A | 10 mA | 2311 mA | 90 | 90 | 1560μF |

NOTE:
1. Nominal Input Voltage 36 VDC
2. Measured at 48Vin
3. An External Input Capacitor 220uF for All Models are Recommended to Reduce Input Ripple Voltag

## Remote On/Off Control

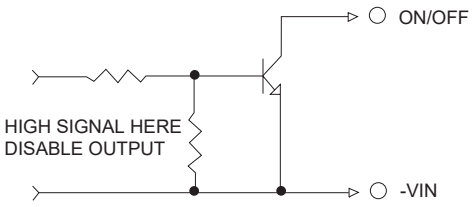


## External Output Trim

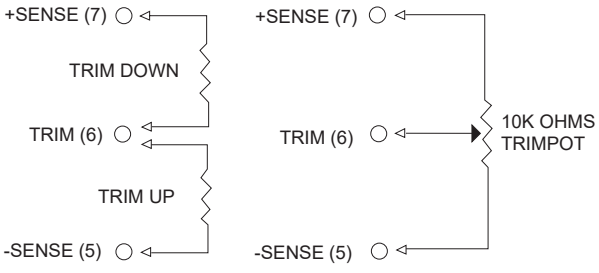


## Specifications

All Specifications Typical At Nominal Line, Full Load, and 25˚C Unless Otherwise Noted

### INPUT SPECIFICATIONS

| | |
|---|---|
| Input Voltage Range | 36V ..... 9-75V |
| Input Surge Voltage (100ms max.) | 100Vdc max. |
| Under voltage lockout | power up ..... 8.8V |
| | power down ..... 8.0V |
| Positive Logic Remote On/Off | See note 4 & 5 |
| Input Filter (note 7) | PI Type |

### OUTPUT SPECIFICATIONS

| | |
|---|---|
| Voltage Accuracy | ±1.0% max. |
| Transient Response: 25% Step Load Change | |
| Error Band | ±5% Vout nominal |
| Recovery Time | <250us |
| External Trim Adj. Range | -20%, +15% |
| Ripple & Noise, 20MHz BW ( note 3) | |
| 12V & 15V | 80mV RMS, 150mV pk-pk max. |
| 24V & 28V | 120mV RMS, 240mV pk-pk max. |
| 48V | 220mV RMS, 480mV pk-pk max. |
| Temperature Coefficient | ±0.02%/°C max. |
| Short Circuit Protection | Continuous |
| Line Regulation (note 1) | ±0.2% max. |
| Load Regulation (note 2) | ±0.2% max. |
| Over Voltage Protection trip Range, % Vo nom. | 115-140% |
| Current Limit | 110%-200% Nominal Output |
| Start up time | 30ms typ. |

### GENERAL SPECIFICATIONS

| | |
|---|---|
| Efficiency | See Table |
| Isolation Voltage | Input/Output ..... 3000VAC min. |
| | Input/Case ..... 2700VDC min. |
| | Output/Case ..... 1600VDC min. |
| Isolation Resistance | $10^8$ ohm min. |
| Isolation Capacitance | 1000pF typ |
| Switching Frequency | 200KHz typ. |
| Operating Case Temperature | -40˚C to 105˚C |
| Storage Temperature | -55˚C to +125˚C |
| Thermal Shutdown, Case Temp. | 110˚C typ. |
| Humidity | 95% RH max. Non condensing |
| MTBF ...MIL-HDBK-217F, GB, 25˚C, Full Load | TBD. |
| Safety | Meet UL62368 (Reinforced Insulation) |
| EMC (note 8) | Meet EN50155 (EN50121-3-2) with External Flter |
| Shock/Vibration | Meet EN50155 (EN61373) |
| Environmental | Meet EN50155(EN60068-2-1,2,30) |
| Fire & Smoke | Meet EN45545-2 |
| Dimensions | 2.28 x 1.45 x 0.50 inches (57.9 x 36.8 x 12.7 mm) |
| Case Material | Aluminum Baseplate with Plastic Case |
| Weight | 61.5 g |

### NOTE

1. Measured from high line to low line.
2. Measured from full load to zero load.
3. Output ripple and noise measured with 22uF aluminum solid capacitor and 1uF ceramic capacitor across output.
4. Logic compatibility ..... open collector ref to -Input
   Module on..... > 3.5VDC to 75VDC or open circuit
   Module off ..... 0 to <1.2 VDC
5. Suffix "N" to the model number with negative logic remote on/off
   Module on ..... 0 to <1.2 VDC
   Module off ..... >3.5VDC to 75VDC or open circuit
6. Suffix "-C" to the model number with clear mounting insert (3.2mm DIA.)
7. An external input capacitor 220uF for all models are recommended to reduce input ripple voltage
8. For information about EN50155 and RIA12, refer to application note.

# CQB100W SERIES
## 100 WATT, 4:1 INPUT RANGE

### Features

- 100W Isolated Output
- Quarter-Brick Package
- 4 : 1 Input Range
- Efficiency to 88%
- Regulated Output
- Input Under Voltage Protection
- Over Temperature Protection
- Over Voltage/Current Protection
- Remote On/Off
- 1500VDC Isolation
- Safety Meets UL60950-1

CE

### Mechanical Dimensions

All Dimensions in Inches (mm)
Tolerance Inches: X.XX=±0.02 , X.XXX=±0.010
Millimeters: X.X=±0.5 , X.XX=±0.25

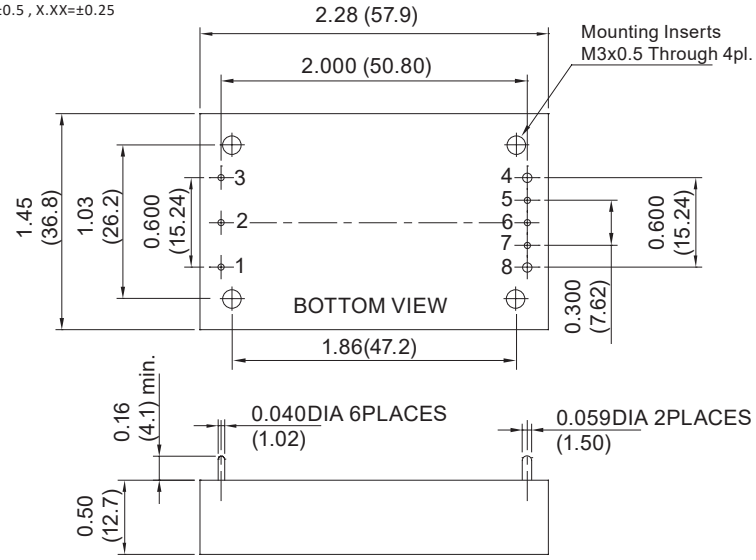


| PIN CONNECTION | |
|---|---|
| PIN | Function |
| 1 | +V Input |
| 2 | On/Off |
| 3 | -V Input |
| 4 | -V Output |
| 5 | -Sense |
| 6 | Trim |
| 7 | +Sense |
| 8 | +V Output |

| MODEL NUMBER | INPUT VOLTAGE | OUTPUT VOLTAGE | OUTPUT CURRENT MIN. | OUTPUT CURRENT MAX. | INPUT CURRENT NO LOAD | INPUT CURRENT FULL LOAD | % EFF. | CAPACITOR LOAD MAX. |
|---|---|---|---|---|---|---|---|---|
| CQB100W-24S3V3 | 9-36 VDC | 3.3VDC | 0 mA | 30 A | 120 mA | 4797 mA | 86 | 10000µF |
| CQB100W-24S05 | 9-36 VDC | 5 VDC | 0 mA | 20 A | 120 mA | 4817 mA | 86.5 | 10000µF |
| CQB100W-24S12 | 9-36 VDC | 12 VDC | 0 mA | 8.3 A | 80 mA | 4798 mA | 86.5 | 2200µF |
| CQB100W-24S15 | 9-36 VDC | 15 VDC | 0 mA | 6.7 A | 80 mA | 4841 mA | 86.5 | 2200µF |
| CQB100W-24S24 | 9-36 VDC | 24 VDC | 0 mA | 4.17 A | 80 mA | 4793 mA | 87 | 2200µF |
| CQB100W-48S3V3 | 18-75 VDC | 3.3 VDC | 0 mA | 30 A | 60 mA | 2344 mA | 88 | 10000µF |
| CQB100W-48S05 | 18-75 VDC | 5 VDC | 0 mA | 20 A | 60 mA | 2367 mA | 88 | 10000µF |
| CQB100W-48S12 | 18-75 VDC | 12 VDC | 0 mA | 8.3 A | 30 mA | 2358 mA | 88 | 2200µF |
| CQB100W-48S15 | 18-75 VDC | 15 VDC | 0 mA | 6.7 A | 30 mA | 2379 mA | 88 | 2200µF |
| CQB100W-48S24 | 18-75 VDC | 24 VDC | 0 mA | 4.17 A | 30 mA | 2369 mA | 88 | 2200µF |

## External Output Trim

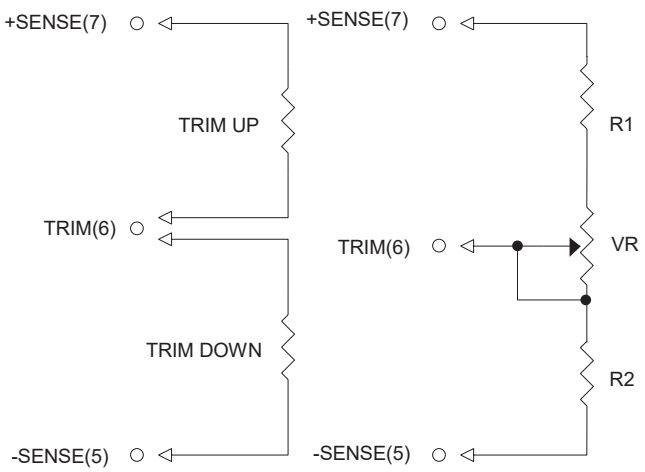


## Specifications

All Specifications Typical At Nominal Line, Full Load, and 25˚C Unless Otherwise Noted

### INPUT SPECIFICATIONS

| | | |
|---|---|---|
| Input Voltage Range | | 24V ..... 9-36V |
| | | 48V..... 18-75V |
| Input Surge Voltage (100ms max.) | | 24V .....50Vdc max. |
| | | 48V ..... 100Vdc max. |
| Under voltage lockout | 24Vin | power up ..... 8.8V typ. |
| | | power down ..... 8V typ. |
| | 48Vin | power up ..... 17V typ. |
| | | power down ..... 16V typ. |
| Input Filter | | Pi Type |
| Positive Logic Remote On/Off | | See note 4 & 5 |

### OUTPUT SPECIFICATIONS

| | |
|---|---|
| Voltage Accuracy | ±1.0% max. |
| Transient Response: 75% to 100% Step Load Change | |
| Error Band | 3.3V±7% Vout, Others±5% Vout |
| Recover Time | < 500µs |
| External Trim Adj. Range (note 6) | ±10% |
| Ripple and Noise, 20MHz BW (see note 3) | |
| 3.3V & 5V | 40mV RMS, 100mV pk-pk max. |
| 12V & 15V | 60mV RMS, 150mV pk-pk max. |
| 24V | 100mV RMS, 240mV pk-pk max. |
| Temperature Coefficient | ±0.03%/˚C max. |
| Short Circuit Protection | Continuous |
| Line Regulation (note 1) | ±0.2% max. |
| Load Regulation (note 2) | ±0.2% max. |
| Over Voltage Protection Trip Range, %Vo nom. | 115-140% |
| Current Limit | 110%-160% Nominal Output |
| Start up time | 120ms typ. |

### GENERAL SPECIFICATIONS

| | |
|---|---|
| Efficiency | See Table |
| Isolation Voltage | Input/Output..... 1500VDC min. |
| | Input/Case..... 1500VDC min. |
| | Output/Case..... 1500VDC min. |
| Isolation Resistance | $10^7$ Ohms min. |
| Isolation Capacitance | 1000pF typ. |
| Switching Frequency | 48Vin ..... 250KHz typ. |
| | 24Vin ..... 220KHz typ. |
| Operating Case Temperature | -40˚C to 100˚C |
| Storage Temperature Range | -40˚C to +105˚C |
| Thermal Shutdown, Case Temp. | 110˚C typ. |
| Dimensions | 1.45 x 2.28 x 0.50 inches (36.8 x 57.9 x 12.7 mm) |
| Humidity | 95% RH max. Non condensing |
| MTBF .... MIL-STD-217F, GB, 25˚C , Full Load | 600Khrs typ. |
| Case Material | Aluminum Base-plate with Plastic Case |
| Weight | 66 g |

### NOTE

1. Measured from high line to low line.
2. Measured from full load to min. load.
3. The output noise is measured with 10µF tantalum capacitor and 1µF ceramic capacitor across output.
4. Logic compatibility ..... open collector ref to -Input
   Module On ..... >3.5VDC to 75VDC or open circuit
   Module Off ..... < 1.2VDC
5. Suffix "N" to the model number with negative logic remote On/Off
   Module On ..... < 1.2VDC
   Module Off ..... >3.5VDC to 75VDC or Open Circuit
6. Trim-up ..... connect a resistor between the trim pin and +Sense
   Trim-down ..... connect a resistor between the trim pin and -Sense
7. Suffix "-C" to the model number with clear mounting insert(3.2mm DIA.)
8. An external input capacitor 47µF for 48Vin models and 100µF for 24Vin models are recommended to reduce input ripple voltage.

# CQB100-110S SERIES
## 100 WATT, INPUT RANGE 66-160 VDC

### Features

- 100W Isolated Output
- Efficiency to 93%
- 200KHz Switching Frequency
- 3 : 1 Input Range
- Regulated Outputs
- Remote On/Off
- Over Temperature Protection
- Over Voltage/Current Protection
- Continuous Short Circuit Protection
- Quarter Brick Size Meets Industrial Standard
- UL60950-1 Approval (Except 3.3 Vout)
- Meets EN50155

### Mechanical Dimensions

All Dimensions in Inches (mm)
Tolerance Inches: X.XX=±0.02 , X.XXX=±0.010
Millimeters: X.X=±0.5 , X.XX=±0.25

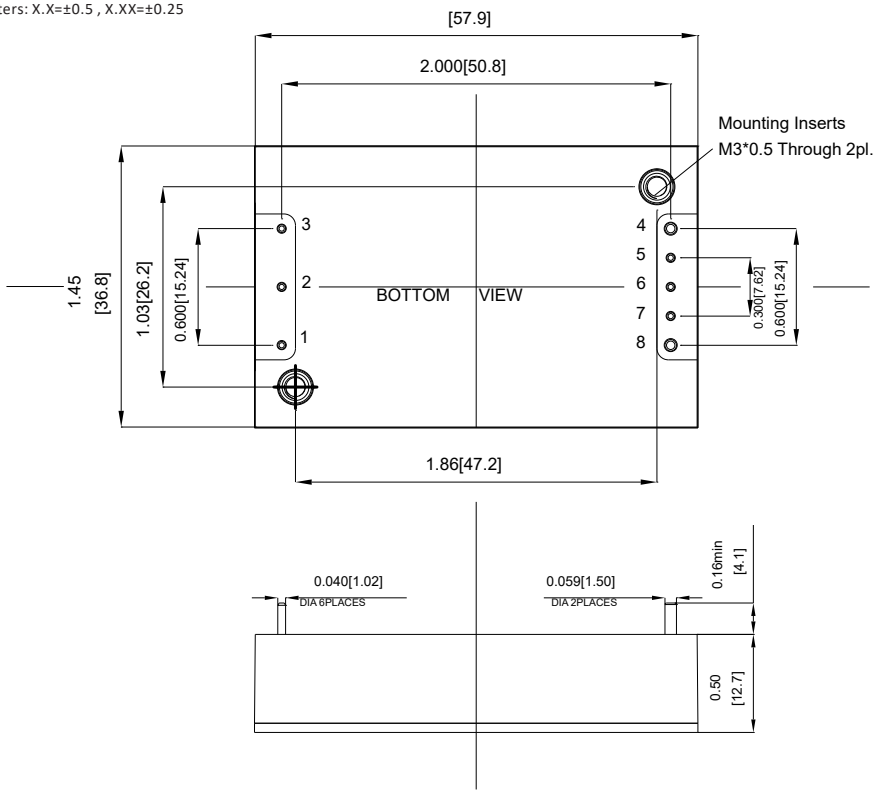


| PIN CONNECTION | |
|---|---|
| PIN | Function |
| 1 | +V Input |
| 2 | On/Off |
| 3 | -V Input |
| 4 | -V Output |
| 5 | -Sense |
| 6 | Trim |
| 7 | +Sense |
| 8 | +V Output |

| MODEL NUMBER | INPUT VOLTAGE | OUTPUT VOLTAGE | OUTPUT CURRENT MIN. | OUTPUT CURRENT MAX. | INPUT CURRENT NO LOAD | INPUT CURRENT FULL LOAD | % EFF. | CAPACITOR LOAD MAX. |
|---|---|---|---|---|---|---|---|---|
| CQB100-110S3V3 | 66-160 VDC | 3.3 VDC | 0 mA | 25 A | 40 mA | 833 mA | 90 | 10000μF |
| CQB100-110S05 | 66-160 VDC | 5.0 VDC | 0 mA | 20 A | 30 mA | 983 mA | 92.5 | 10000μF |
| CQB100-110S12 | 66-160 VDC | 12 VDC | 0 mA | 8.4 A | 40 mA | 985 mA | 93 | 8800μF |
| CQB100-110S24 | 66-160 VDC | 24 VDC | 0 mA | 4.2 A | 60 mA | 996 mA | 92 | 1500μF |

## External Output Trim

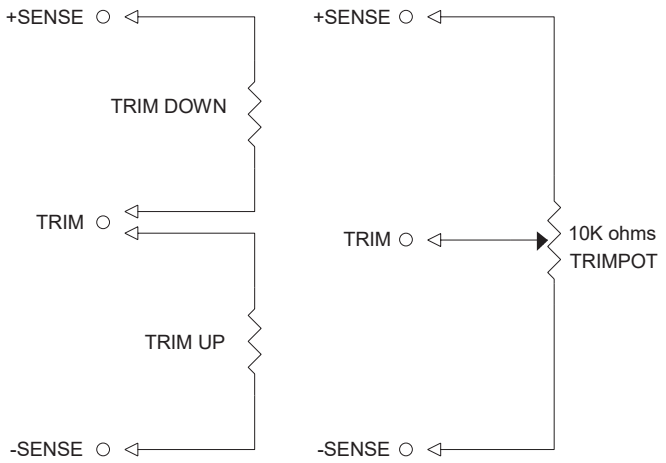


## Specifications

All Specifications Typical At Nominal Line, Full Load, and 25˚C Unless Otherwise Noted

### INPUT SPECIFICATIONS

| | |
|---|---|
| Input Voltage Range | 110V, 66-160V |
| Input Surge Voltage (100ms max.) | 180Vdc max. |
| Under Voltage Lockout | power up 62V<br>power down 56V |
| Positive Logic Remote On/Off: | |
| Logic Compatibility | Open Collector ref. to -Input |
| Module On | > 3.5Vdc to 75Vdc or Open Circuit |
| Module Off | < 1.8Vdc |
| Input Filter | Pi Type |

### OUTPUT SPECIFICATIONS

| | |
|---|---|
| Voltage Accuracy | ±1.0% max.<br>3.3V:±1.5% max |
| Transient Response: | |
| 25% Step Load Change | < 200µs |
| External Trim Adj. Range | ±10% |
| Ripple & Noise, 20MHz BW (note 3) | |
| 3.3 & 5V | 40mV RMS, 100mV pk-pk max. |
| 12V | 60mV RMS, 150mV pk-pk max. |
| 24V | 100mV RMS, 240mV pk-pk max. |
| Temperature Coefficient | ±0.03%/°C |
| Short Circuit Protection | Continuous |
| Line Regulation (note 1) | ±0.2% max. |
| Load Regulation (note 2) | ±0.2% max. |
| Over Voltage Protection Trip Range, % Vo nom. | 115-140% |
| Current Limit | 110%-180% Nominal Output |
| Start up time | 45ms typ. |

### GENERAL SPECIFICATIONS

| | |
|---|---|
| Efficiency | See Table |
| Isolation Voltage | Input/Output ..... 2250VDC min.<br>Input/Case ..... 2250VDC min.<br>Output/Case ..... 1500VDC min. |
| Isolation Resistance | $10^7$ ohm min. |
| Isolation Capacitance | 1000pF typ. |
| Switching Frequency | 200KHz typ. |
| Operating Case Temperature | -40˚C to 100˚C |
| Storage Temperature | -55˚C to +105˚C |
| Thermal Shutdown Case Temp. | 105˚C typ. |
| Humidity | 95% RH max. Non condensing |
| MTBF ..... MIL-HDBK-217F, GB, 25˚C, Full Load | XXS3V3:400Khrs typ<br>XXS05:240Khrs typ.<br>Others :320Khrs typ. |
| Safety (Except 3.3 Vout) | UL60950-1 2nd(Basic insulation), Approval |
| EMC (note 7) | Meet EN50155 (EN50121-3-2) with External Flter |
| Shock/Vibration | Meet EN50155 (EN61373) |
| Environmental | Meet EN50155 (EN60068-2-1) |
| Dimensions | 2.28 x 1.45 x 0.50 inches<br>(57.9 x 36.8 x 12.7 mm) |
| Case Material | Aluminum Baseplate with Plastic Case |
| Weight | 61.5 g |

### NOTE

1. Measured from high line to low line.
2. Measured from full load to zero load.
3. Output ripple and noise measured with 10µF tantalum and 1µF ceramic apacitor across output.
4. Suffix "N" to the model number with negative logic remote On/Off
   Module On < 1.8VDC
   Module Off > 3.5VDC to 75VDC or open circuit
5. Suffix "-C" to the model number with clear mounting insert (3.2mm DIA.)
6. An external input capacitor 120µF for all models are recommended to reduce input ripple voltage.
7. Design meet EN50155 and RIA12 refer to application note.

# CQB100W-110S SERIES
## 100 WATT 4:1 INPUT DC-DC CONVERTERS SINGLE OUTPUT

### Features

- 100W Isolated Output
- Efficiency up to 92%
- Fixed Switching Frequency
- 4:1 Input Range
- Regulated Outputs
- Remote On/Off
- Low No Load Power Consumption
- Over Temperature Protection
- Over Voltage/Current Protection
- Continuous Short Circuit Protection
- Quarter Brick Size Meet Industrial Standard
- UL60950-1 2nd(Basic Insulation) Approval
- CB Test Certificate IEC60950-1
- Meets EN50155 with External Circuits
- Shock & Vibration Meet EN50155 (EN61373)
- Fire & Smoke Meet EN45545-2
- 3000m Operating Altitude

E176177

### Mechanical Dimensions

All Dimensions In Inches(mm)
Tolerances Inches: X.XX= ±0.02 , X.XXX= ±0.010
Millimeters: X.X= ±0.5 , X.XX=±0.25

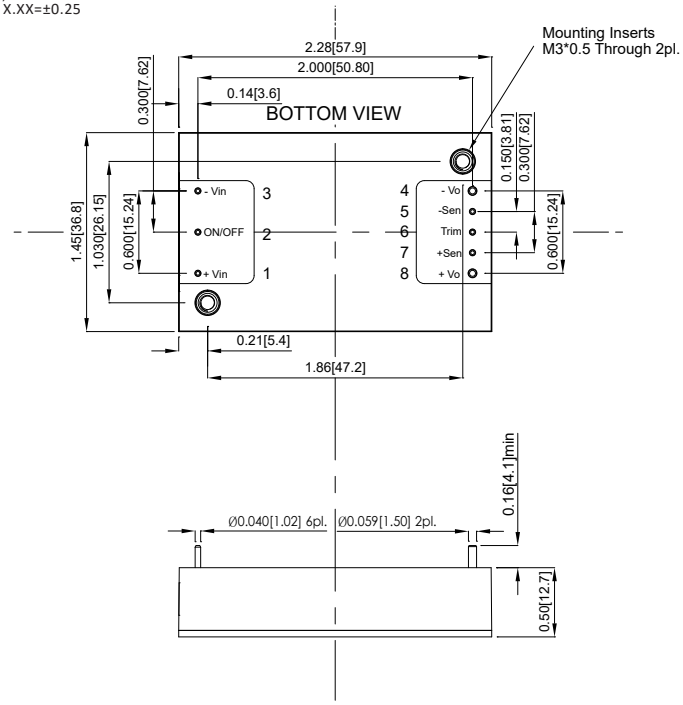


| PIN CONNECTION | |
|---|---|
| PIN | Function |
| 1 | +V Input |
| 2 | On/Off |
| 3 | -V Input |
| 4 | -V Output |
| 5 | -Sense |
| 6 | Trim |
| 7 | +Sense |
| 8 | +V Output |

| MODEL NUMBER | INPUT VOLTAGE | OUTPUT VOLTAGE | OUTPUT CURRENT MIN. | OUTPUT CURRENT MAX. | INPUT CURRENT NO LOAD | INPUT CURRENT FULL LOAD | % EFF. | CAPACITOR LOAD MAX. |
|---|---|---|---|---|---|---|---|---|
| CQB100W-110S05 | 43-160 VDC | 5 VDC | 0 mA | 20 A | 10 mA | 1.00A | 91 | 20000μF |
| CQB100W-110S12 | 43-160 VDC | 12 VDC | 0 mA | 8.4 A | 10 mA | 1.00A | 92 | 8400μF |
| CQB100W-110S24 | 43-160 VDC | 24 VDC | 0 mA | 4.2 A | 10 mA | 1.03A | 89 | 4200μF |
| CQB100W-110S28 | 43-160 VDC | 28 VDC | 0 mA | 3.6 A | 10 mA | 1.04A | 88.5 | 3600μF |
| CQB100W-110S48 | 43-160 VDC | 48 VDC | 0 mA | 2.1 A | 10 mA | 1.02A | 90 | 1000μF |

NOTE:
1. Nominal Input Voltage 110VDC
2. An external input capacitor 220uF for all models are recommended to reduce input ripple voltage.

## Remote On/Off Control

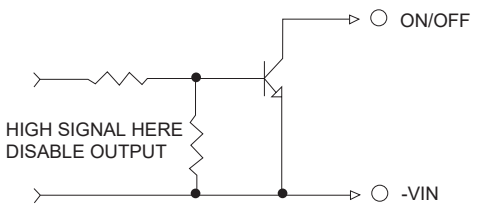


## External Output Trim

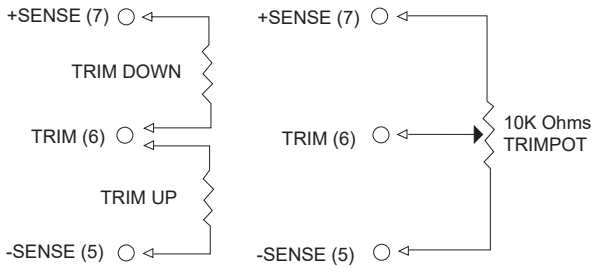


## Specifications

All Specifications Typical At Nominal Line, Full Load, and 25˚C Unless Otherwise Noted

### INPUT SPECIFICATIONS

| | |
|---|---|
| Input Voltage Range | 110V ..... 43-160V |
| Input Surge Voltage (100ms max.) Under voltage | 110V .....200Vdc max. |
| lockout | power up ..... 41.5V |
| | power down ..... 38V |
| Positive Logic Remote On/Off | See note 4 & 5 |
| Input Filter(note 7) | PI Type |

### OUTPUT SPECIFICATIONS

| | |
|---|---|
| Voltage Accuracy | ±1.0% max. |
| Transient Response:75%-100% Step Load Change | |
| Error Band | ±5% Vout nominal |
| Recovery Time | <250us |
| External Trim Adj. Range | ±10% |
| Ripple & Noise, 20MHz BW ( see note 3) | |
| 5V | 40mV RMS, 100mV pk-pk max. |
| 12V | 60mV RMS, 150mV pk-pk max. |
| 24V&28V | 100mV RMS, 280mV pk-pk max. |
| 48V | 200mV RMS, 480mV pk-pk max. |
| Temperature Coefficient | ±0.02%/°C |
| Short Circuit Protection | Continuous |
| Line Regulation (note 1) | ±0.2% max. |
| Load Regulation (note 2) | ±0.2% max. |
| Over Voltage Protection trip Range, % Vo nom. | 115-140% |
| Current Limit | 110%-160% Nominal Output |
| Start up time | 60ms typ. |

### GENERAL SPECIFICATIONS

| | |
|---|---|
| Efficiency | See Table |
| Isolation Voltage | Input/Output ..... 3000VDC min. |
| | Input/Case ..... 2250VDC min. |
| | Output/Case ..... 500VAC min. |
| Isolation Resistance | $10^8$ ohm min. |
| Isolation Capacitance | 1500pF typ |
| Switching Frequency | 300KHz typ. |
| Operating Case Temperature | -40˚C to 105˚C |
| Storage Temperature | -55˚C to +125˚C |
| Thermal Shutdown, Case Temp. | 110˚C typ. |
| Humidity | 95% RH max. Non condensing |
| MTBF ... MIL-STD-217F, GB, 25˚C, Full Load | |
| | 5V/12V ..... 720Khrs typ. |
| | Others ..... 840Khrs typ. |
| Safety | UL60950-1 2 nd (Basic Insulation) |
| EMC (note 8) | EN50155(EN50121-3-2) with External Flter |
| Shock/Vibration | EN50155(EN61373) |
| Environmental | EN50155(EN60068-2-1) |
| Fire & Smoke | Meet EN45545-2 |
| Dimensions | 2.28 x 1.45 x 0.50 inches (57.9 x 36.8 x 12.7 mm) |
| Case Material | Aluminum Base Plate with Plastic Case |
| Weight | 68 g |

### NOTE

1. Measured from high line to low line.
2. Measured from full load to zero load.
3. Output ripple and noise measured with 10uF aluminum and 1uF ceramic capacitor across output for 48Vout and with 10uF tantalum and 1uF ceramic capacitor for others.
4. Logic compatibility ..... open collector ref to -Input
   Module on ..... >3.5Vdc to 160Vdc or open circuit
   Module off ..... 0 to < 1.2Vdc
5. Suffix "N" to the model number with negative logic remote on/off
   Module on ..... 0 to < 1.2Vdc
   Module off ..... >3.5Vdc to 160Vdc or open circuit
6. Suffix “-C” to the model number with clear mounting insert (3.2mm DIA.).
7. An external input capacitor 220uF for all models are recommended to reduce input ripple voltage.
8. For information about EN50155 and RIA12, refer to application note.

# CQB150W SERIES
## 150 WATT, 4:1 INPUT RANGE

### Features

- 150W Isolated Output
- Efficiency to 92%
- Fixed Switching Frequency
- 4 : 1 Input Range
- Regulated Outputs
- Remote On/Off
- Low No Load Power Consumption
- Over Temperature Protection
- Over Voltage/Current Protection
- Continuous Short Circuit Protection
- Quarter Brick Size Meets Industrial Standard
- UL60950-1 2nd Approval
- CB Test Certificate IEC60950-1
- Meets EN50155 with External Circuits
- Shock & Vibration Meets EN50155 (EN61373)
- Fire & Smoke Meets EN45545-2
- 3000m Operating Altitude

E176177

### Mechanical Dimensions

All Dimensions in Inches (mm)
Tolerance Inches: X.XX=±0.02 , X.XXX=±0.010
Millimeters: X.X=±0.5 , X.XX=±0.25

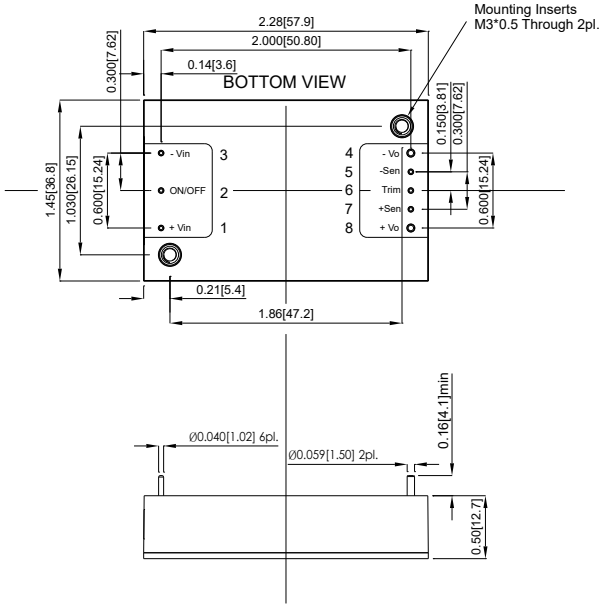


| PIN CONNECTION | |
|---|---|
| PIN | Function |
| 1 | +V Input |
| 2 | On/Off |
| 3 | -V Input |
| 4 | -V Output |
| 5 | -Sense |
| 6 | Trim |
| 7 | +Sense |
| 8 | +V Output |

| MODEL NUMBER | INPUT VOLTAGE | OUTPUT VOLTAGE | OUTPUT CURRENT MIN. | OUTPUT CURRENT MAX. | INPUT CURRENT NO LOAD | INPUT CURRENT FULL LOAD | % EFF. (3) | % EFF. (2) | CAPACITOR LOAD MAX. |
|---|---|---|---|---|---|---|---|---|---|
| CQB150W-24S05 | 9-36 VDC | 5 VDC | 0 mA | 30 A | 10 mA | 7.02 A | 91 | 92 | 30000µF |
| CQB150W-24S12 | 9-36 VDC | 12 VDC | 0 mA | 12.5 A | 10 mA | 7.02 A | 91 | 92 | 12500µF |
| CQB150W-24S24 | 9-36 VDC | 24 VDC | 0 mA | 6.3 A | 10 mA | 7.08 A | 89.5 | 89.5 | 6300µF |
| CQB150W-24S28 | 9-36 VDC | 28 VDC | 0 mA | 5.4 A | 10 mA | 7.08 A | 90 | 90 | 5400µF |
| CQB150W-24S48 | 9-36 VDC | 48 VDC | 0 mA | 3.2 A | 10 mA | 7.19 A | 90.5 | 90.5 | 1000µF |
| CQB150W-48S05 | 18-75 VDC | 5 VDC | 0 mA | 30 A | 8 mA | 3.47 A | 92 | 92 | 30000µF |
| CQB150W-48S12 | 18-75 VDC | 12 VDC | 0 mA | 12.5 A | 8 mA | 3.47 A | 92 | 91 | 12500µF |
| CQB150W-48S24 | 18-75 VDC | 24 VDC | 0 mA | 6.3 A | 8 mA | 3.50 A | 91 | 90.5 | 6300µF |
| CQB150W-48S28 | 18-75 VDC | 28 VDC | 0 mA | 5.4 A | 8 mA | 3.50 A | 91.5 | 90.5 | 5400µF |
| CQB150W-48S48 | 18-75 VDC | 48 VDC | 0 mA | 3.2 A | 8 mA | 3.56 A | 92 | 91.5 | 1000µF |

NOTE:

1. Nominal Input Voltage 24, 48 VDC
2. Measured at Nominal Input Voltage
3. Measured at 12VDC for 24Vin, 24VDC for 48Vin

## Remote On/Off Control

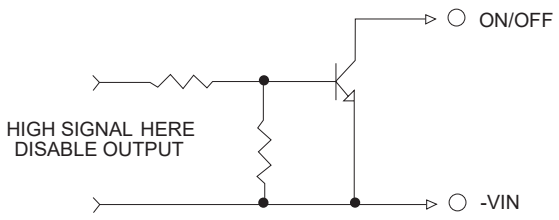


## External Output Trim

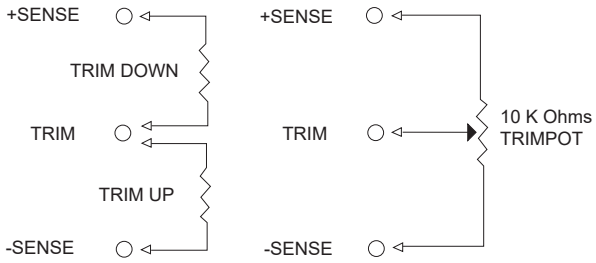


## Specifications

All Specifications Typical At Nominal Line, Full Load, and 25˚C Unless Otherwise Noted

### INPUT SPECIFICATIONS

| | | |
|---|---|---|
| Input Voltage Range | | 24V ..... 9-36V |
| | | 48V ..... 18-75V |
| Input Surge Voltage (100ms max.) | | 24V ..... 50Vdc max. |
| | | 48V ..... 100Vdc max. |
| Under voltage lockout | 24Vin | power up ..... 8.8V |
| | | power down ..... 8.0V |
| | 48Vin | power up ..... 17V |
| | | power down ..... 16V |
| Positive Logic Remote On/Off Input | | see note 4 & 5 |
| Filter (note 7) | | PI Type |

### OUTPUT SPECIFICATIONS

| | |
|---|---|
| Voltage Accuracy: | ±1.0% max |
| Transient Response: 75% to 100% Step Load Change | |
| Error Band | ±5% Vout Recover |
| Recover Time | 250us |
| External Trim Adj. Range | ±10% |
| Ripple & Noise, 20MHz BW | |
| 5V | 40mV RMS, 100mV pk-pk max. |
| 12V | 60mV RMS, 150mV pk-pk max. |
| 24V & 28V | 100mV RMS, 280mV pk-pk max. |
| 48V | 200mV RMS, 480mV pk-pk max. |
| Temperature Coefficient | ±0.02%/°C |
| Short Circuit Protection | Continuous |
| Line Regulation (note 1) | ±0.2% max. |
| Load Regulation (note 2) | ±0.2% max. |
| Over Voltage Protection trip Range ,% Vo nom. | 115-140% |
| Current Limit | 110%-160% Nominal Output |
| Start up time | 60ms typ. |

### GENERAL SPECIFICATIONS

| | |
|---|---|
| Efficiency | See Table |
| Isolation Voltage : | |
| CQB150W-24SXX and CQB150W-48SXX: | Input/Output ..... 2250VDCmin. |
| | Input/Case ..... 2250VDCmin. |
| | Output/Case ..... 2250VDCmin. |
| Isolation Resistance | $10^8$ ohm min. |
| Isolation Capacitance | 1500pF typ. |
| Switching Frequency | 300KHz typ. |
| Operating Ambient Temperature | -40˚C to +105˚C |
| Storage Temperature | -55˚C to +105˚C |
| Thermal Shutdown, Case Temperature | 110˚C typ. |
| Humidity | 95% RH max. Non condensing |
| Shock/Vibration | Meet MIL-STD-810F/EN6137 |
| Dimensions | 2.28 × 1.45 x 0.50 inches (57.9 x 36.8 × 12.7 mm) |
| Case Material | Aluminum Baseplate with Plastic Case |
| Weight | 68 g |

### NOTE

1. Measured from high line to low line.
2. Measured from full load to zero load.
3. Output ripple and noise measured with 10µF aluminum and 1µF ceramic capacitor across output for 48Vout and with 10µF tantalum and 1µF ceramic capacitor for others.
4. Logic compatibility ..... open collector ref to -Input
   Module On ..... >3.5VDC to 75VDC or open circuit
   Module Off .....0 to < 1.2Vdc
5. Suffix "N" to the model number with negative logic remote On/Off
   Module On .....0 to < 1.2Vdc
   Module Off ..... >3.5VDC to 75VDC or open circuit
6. Suffix "-C" to the model number with clear mounting insert (3.2mm DIA.)
7. An external input capacitor 220µF for all models are recommended to reduce input ripple voltage.

# CQB150W-110S SERIES
## 150 WATT, INPUT RANGE 43-160 VDC

### Features

- 150W Isolated Output
- Efficiency to 92%
- Fixed Switching Frequency
- 4 : 1 Input Range
- Regulated Outputs
- Remote On/Off
- Low No Load Power Consumption
- Over Temperature Protection
- Over Voltage/Current Protection
- Continuous Short Circuit Protection
- Quarter Brick Size Meets Industrial Standard
- UL60950-1 2nd (Basic Insulation) Approval
- CB Test Certificate IEC60950-1
- Meets EN50155 with External Circuits
- Shock & Vibration Meets EN50155 (EN61373)
- Fire & Smoke Meets EN45545-2
- 3000m Operating Altitude

E176177

### Mechanical Dimensions

All Dimensions in Inches (mm)
Tolerance Inches: X.XX=±0.02 , X.XXX=±0.010
Millimeters: X.X=±0.5 , X.XX=±0.25

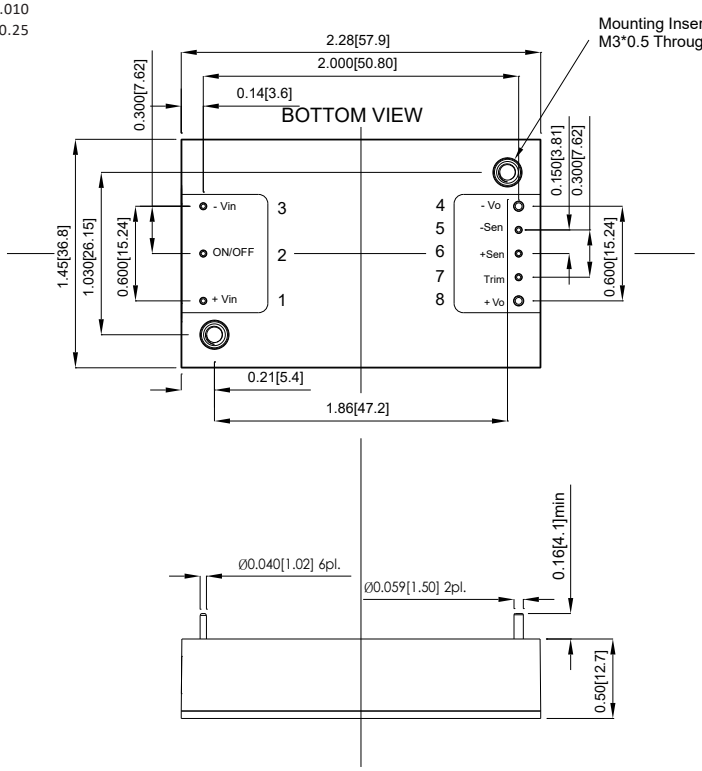


| PIN CONNECTION | |
|---|---|
| PIN | Function |
| 1 | +V Input |
| 2 | On/Off |
| 3 | -V Input |
| 4 | -V Output |
| 5 | -Sense |
| 6 | Trim |
| 7 | +Sense |
| 8 | +V Output |

| MODEL NUMBER | INPUT VOLTAGE | OUTPUT VOLTAGE | OUTPUT CURRENT | | INPUT CURRENT | | % EFF. | CAPACITOR LOAD MAX. |
|---|---|---|---|---|---|---|---|---|
| | | | MIN. | MAX. | NO LOAD | FULL LOAD | | |
| CQB150W-110S05 | 43-160 VDC | 5 VDC | 0 mA | 30 A | 10 mA | 1.50 A | 91 | 30000µF |
| CQB150W-110S12 | 43-160 VDC | 12 VDC | 0 mA | 12.5 A | 10 mA | 1.48 A | 92 | 12500µF |
| CQB150W-110S24 | 43-160 VDC | 24 VDC | 0 mA | 6.3 A | 10 mA | 1.54 A | 89 | 6300µF |
| CQB150W-110S28 | 43-160 VDC | 28 VDC | 0 mA | 5.4 A | 10 mA | 1.54 A | 89 | 5400µF |
| CQB150W-110S48 | 43-160 VDC | 48 VDC | 0 mA | 3.2 A | 10 mA | 1.54 A | 90.5 | 1000µF |

## Remote On/Off Control

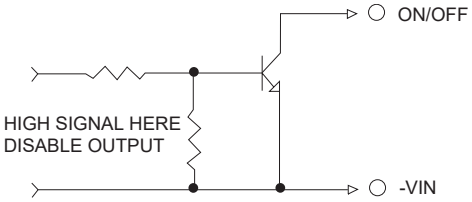


## External Output Trim

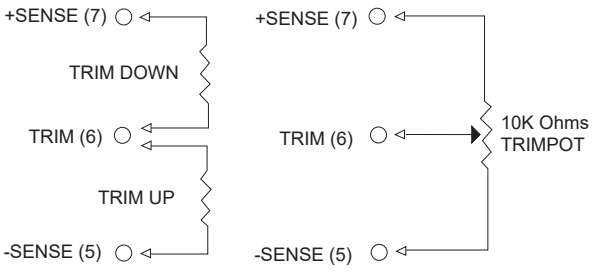


## Specifications

All Specifications Typical At Nominal Line, Full Load, and 25˚C Unless Otherwise Noted

### INPUT SPECIFICATIONS

| | |
|---|---|
| Input Voltage Range | 110V, 43-160V |
| Input Surge Voltage (100ms max.) | 110V, 200Vdc max. |
| Under voltage lockout | 110Vin power up 41.5V<br>110Vin power down 38V |
| Positive Logic Remote On/Off (see note 4 & 5) | |
| Input Filter(note 7) | PI Type |

### OUTPUT SPECIFICATIONS

| | |
|---|---|
| Voltage Accuracy: | ±1.0% max. |
| Transient Response: 25% Step Load Change | < 250µs |
| External Trim Adj. Range | ±10% |
| Ripple & Noise, 20MHz BW | |
| 5V | 40mV RMS, 100mV pk-pk max. |
| 12V | 60mV RMS, 150mV pk-pk max. |
| 24V & 28V | 100mV RMS, 280mV pk-pk max. |
| 48V | 200mV RMS, 480mV pk-pkmax. |
| Temperature Coefficient | ±0.02%/°C max. |
| Short Circuit Protection | Continuous |
| Line Regulation (note 1) | ±0.2% max. |
| Load Regulation (note 2) | ±0.2% max. |
| Over Voltage Protection trip Range, % Vo nom. | 115-140% |
| Current Limit | 110%-160% Nominal Output |
| Start up time | 60ms typ. |

### GENERAL SPECIFICATIONS

| | |
|---|---|
| Efficiency | See Table |
| Isolation Voltage : | |
| | Input/Output .....3000VDC min. |
| | Input/Case ..... 2250VDC min. |
| | Output/Case ..... 500VDC min. |
| Isolation Resistance | $10^8$ ohm min. |
| Isolation Capacitance | 1500pF typ. |
| Switching Frequency | 300KHz typ. |
| Operating Ambient Temperature | -40˚C to +105˚C |
| Storage Temperature | -55˚C to +105˚C |
| Thermal Shutdown, Case Temperature | 110˚C typ. |
| Humidity | 95% RH max. Non condensing |
| MTBF | MIL-HDBK-217F, GB, 25˚C, Full Load<br>5V/12V:720Khrs typ.<br>Others:840Khrs typ. |
| Dimensions | 2.28 × 1.45 x 0.50 inches<br>(57.9 x 36.8 × 12.7 mm) |
| Safety | UL60950-1 2nd (Basic Insulation) |
| EMC (note 8) | EN50155 (EN50121-3-2)<br>with External Filter |
| Shock/Vibration | EN50155 (EN61373) |
| Environmental | EN50155 (EN60068-2-1) |
| Case Material | Aluminum Base Plate<br>with Plastic Case |
| Weight | 68 g |

### NOTE

1. Measured from high line to low line.
2. Measured from full load to zero load.
3. Output ripple and noise measured with 10µF tantalum and 1µF ceramic capacitor across output for 48Vout and with 10uF tantalum and 1uF ceramic capacitor for others.
4. Logic compatibility ..... open collector ref to -Input
   Module On >3.5Vdc to 160Vdc or open circuit
   Module Off 0 to < 1.2Vdc
5. Suffix "N" to the Model Number with Negative Logic Remote On/Off
   Module On 0 to < 1.2Vdc
   Module Off >3.5Vdc to 160Vdc or Open Circuit
6. Suffix "-C" to the Model Number with Clear Mounting Insert (3.2mm DIA.)
7. An external input capacitor 220uF for all models are recommended to reduce input ripple voltage
8. For information about EN50155 and RIA12, refer to application note.

# CQB150-300S SERIES
## 150 WATT, INPUT RANGE 180-425 VDC

### Features

- 150W Isolated Output
- Efficiency to 89%
- Fixed Switching Frequency
- Regulated Outputs
- Remote On/Off
- Low No Load Power Consumption
- Over Temperature Protection
- Over Voltage/Current Protection
- Continuous Short Circuit Protection
- Quarter Brick Size meets Industrial Standard
- UL60950-1 2nd (Reinforced Insulation) Approval
- CB Test Certificate IEC60950-1
- Shock & Vibration Meets EN50155 (EN61373)
- Fire & Smoke Meets EN45545-2

E176177

### Mechanical Dimensions

All Dimensions in Inches (mm)
Tolerance Inches: X.XX=±0.02 , X.XXX=±0.010
Millimeters: X.X=±0.5 , X.XX=±0.25

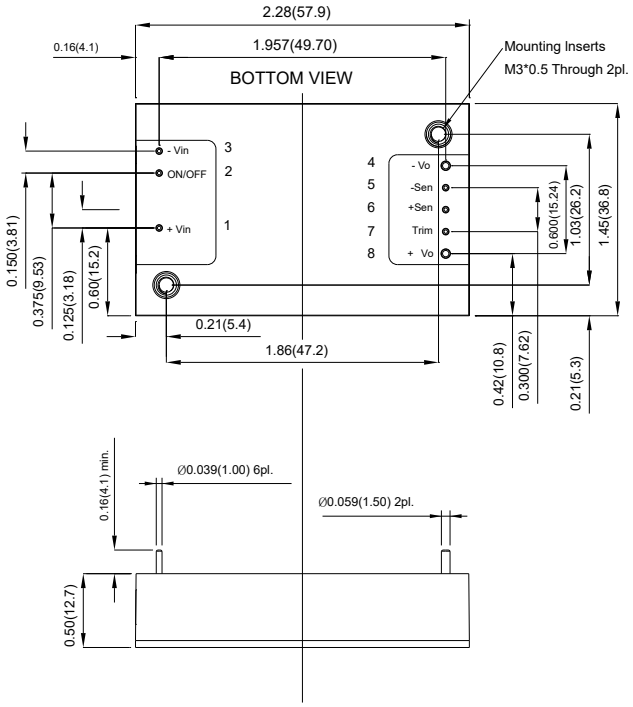


| PIN CONNECTION | |
|---|---|
| PIN | Function |
| 1 | +V Input |
| 2 | On/Off |
| 3 | -V Input |
| 4 | -V Output |
| 5 | -Sense |
| 6 | Trim |
| 7 | +Sense |
| 8 | +V Output |

| MODEL NUMBER | INPUT VOLTAGE | OUTPUT VOLTAGE | OUTPUT CURRENT | | INPUT CURRENT | | % EFF. | CAPACITOR LOAD MAX. |
|---|---|---|---|---|---|---|---|---|
| | | | MIN. | MAX. | NO LOAD | FULL LOAD | | |
| CQB150-300S05 | 180-425 VDC | 5 VDC | 0 mA | 30 A | 10 mA | 580 mA | 86 | 10000µF |
| CQB150-300S12 | 180-425 VDC | 12 VDC | 0 mA | 12.5 A | 10 mA | 560 mA | 89 | 8800µF |
| CQB150-300S15 | 180-425 VDC | 15 VDC | 0 mA | 10 A | 10 mA | 560 mA | 89 | 8800µF |
| CQB150-300S24 | 180-425 VDC | 24 VDC | 0 mA | 6.3 A | 10 mA | 570 mA | 88.5 | 3300µF |
| CQB150-300S28 | 180-425 VDC | 28 VDC | 0 mA | 5.4 A | 10 mA | 570 mA | 88.5 | 3300µF |
| CQB150-300S48 | 180-425 VDC | 48 VDC | 0 mA | 3.2 A | 10 mA | 570 mA | 89 | 1000µF |

NOTE:
1. Nominal Input Voltage 300 VDC.
2. Require a Ceramic Capacitor 2200pF Connected Between –Vin to Case for All Models.
3. An External Input Capacitor 180uF for All Models are Recommended to Reduce Input Ripple Voltage.
4. Measure at Nominal Input Voltage.

## Remote On/Off Control

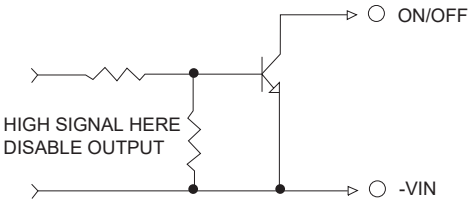


## External Output Trim

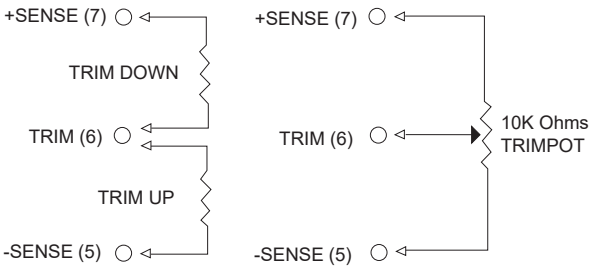


## Specifications

All Specifications Typical At Nominal Line, Full Load, and 25˚C Unless Otherwise Noted

### INPUT SPECIFICATIONS

| | |
|---|---|
| Input Voltage Range | 300V..... 180-425V |
| Input over voltage protection | Module on.....440V typ. |
| | Module off.....450V typ. |
| Under voltage lockout | 300Vin power up ..... 170V |
| | 300Vin power down.....160V |
| Positive Logic Remote On/Off | See note 4 & 5 |
| Input Filter(note 7) | PI Type |

### OUTPUT SPECIFICATIONS

| | |
|---|---|
| Voltage Accuracy: | ±1.0% max. |
| Transient Response: 25% Step Load Change | <250us |
| External Trim Adj. Range | +10%, -20% |
| Ripple & Noise, 20MHz BW | |
| 5V | 60mV RMS, 100mV pk-pk, max. |
| 12V & 15V | 60mV RMS, 150mV pk-pk max. |
| 24V & 28V | 100mV RMS, 280mV pk-pk max. |
| 48V | 200mV RMS, 480mV pk-pk max. |
| Temperature Coefficient | ±0.02%/°C |
| Short Circuit Protection | Continuous |
| Line Regulation (note 1) | ±0.2% max. |
| Load Regulation (note 2) | ±0.2% max. |
| Over Voltage Protection trip Range ,% Vo nom. | 115-140% |
| Current Limit | 110%-160% Nominal Output |
| Start up time | 280ms typ. |

### GENERAL SPECIFICATIONS

| | |
|---|---|
| Efficiency | See Table |
| Isolation Voltage : | |
| Isolation Voltage | Input/Output.....3000VAC min. |
| | Input/Case..... 2500VAC min. |
| | Output/Case.....500VAC min. |
| Isolation Resistance | $10^8$ ohm min. |
| Switching Frequency | 360KHz typ. |
| Operating Ambient Temperature | -40˚C to +105˚C |
| Storage Temperature | -55˚C to +105˚C |
| Thermal Shutdown, Case Temperature | 110°C typ. |
| Humidity | 95% RH max. Non condensing MIL-HDBK-217F, GB, 25˚C, Full Load |
| MTBF | 48V:1000Khrs typ. |
| | Others:800Khrs typ. |
| Dimensions | 2.2 8× 1.45 x 0.50 inches (57.9 x 36.8 × 12.7 mm) |
| Case Material | Aluminum Base Plate with Plastic Case |
| Weight | 65 g |

### NOTE

1. Measured from high line to low line.
2. Measured from full load to zero load.
3. Output ripple and noise measured with 10μF tantalum and 1μF ceramic capacitor across output for 48Vout and with 10uF tantalum and 1uF ceramic capacitor for others.
4. Logic compatibility ..... open collector ref to -Input
   Module On ..... >3.5VDC to 75VDC or open circuit
   Module Off ..... 0 to< 1.2Vdc
5. Suffix "N" to the model number with negative logic remote On/Off
   Module On .....0 to< 1.2Vdc
   Module Off ..... >3.5Vdc to 75Vdc or Open Circuit
6. Suffix "-C" to the model number with clear mounting insert (3.2mm DIA.)
7. An external input capacitor 180uF for all models are recommended to reduce input ripple voltage.
8. Require a disc ceramic capacitor 2200pF (type KX Class X1 Y1 series Murata) connected between –vin to case for all models.

# CHB50 SERIES
## 33-50 WATT

### Features

- 33W-50W Isolated Output
- Efficiency to 89%
- 300/400KHz Switching Frequency
- 2 : 1 Input Range
- Regulated Outputs
- Continuous Short Circuit Protection
- Five-Sided Metal Case
- Half-Brick Size Meet Industrial Standard
- Safety Meets UL60950-1, EN60950-1 and IEC60950-1
- UL60950-1 Approval

E176177

### Mechanical Dimensions

All Dimensions in Inches (mm)
Tolerance Inches: X.XX=±0.02 , X.XXX=±0.010
Millimeters: X.X=±0.5 , X.XX=±0.25

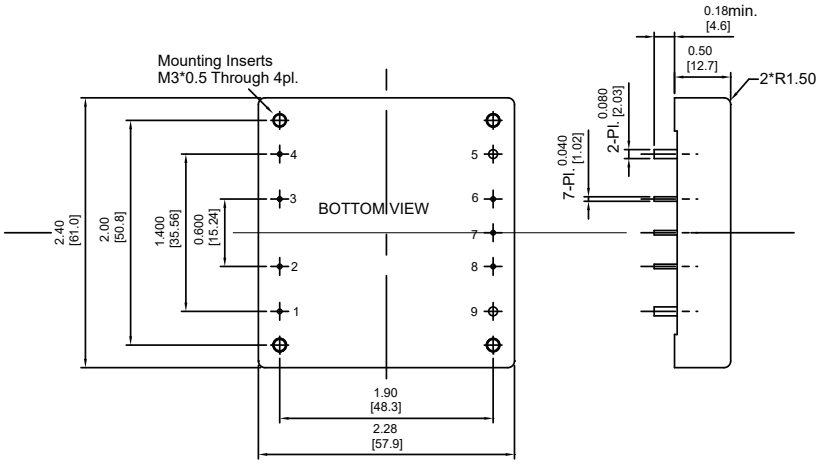


| PIN CONNECTION | |
|---|---|
| PIN | Function |
| 1 | +V Input |
| 2 | On/Off |
| 3 | Case |
| 4 | -V Input |
| 5 | -V Output |
| 6 | -Sense |
| 7 | Trim |
| 8 | +Sense |
| 9 | +V Output |

| MODEL NUMBER | INPUT VOLTAGE | OUTPUT VOLTAGE | OUTPUT CURRENT | | INPUT CURRENT | | % EFF. | CAPACITOR LOAD MAX. |
|---|---|---|---|---|---|---|---|---|
| | | | MIN. | MAX. | NO LOAD | FULL LOAD | | |
| CHB50-12S33 | 9 -18 VDC | 3.3 VDC | 0 mA | 10 A | 50 mA | 3481 mA | 79 | 10000μF |
| CHB50-12S05 | 9 -18 VDC | 5 VDC | 0 mA | 10 A | 50 mA | 5020 mA | 83 | 10000μF |
| CHB50-12S12 | 9 -18 VDC | 12 VDC | 0 mA | 4.16 A | 50 mA | 4781 mA | 87 | 4000μF |
| CHB50-12S15 | 9 -18 VDC | 15 VDC | 0 mA | 3.33 A | 50 mA | 4781 mA | 87 | 2000μF |
| CHB50-12S24 | 9 -18 VDC | 24 VDC | 0 mA | 2.08 A | 50 mA | 4781 mA | 87 | 1500μF |
| CHB50-24S33 | 18-36 VDC | 3.3 VDC | 0 mA | 10 A | 50 mA | 1698 mA | 81 | 10000μF |
| CHB50-24S05 | 18-36 VDC | 5 VDC | 0 mA | 10 A | 50 mA | 2450 mA | 85 | 10000μF |
| CHB50-24S12 | 18-36 VDC | 12 VDC | 0 mA | 4.16 A | 50 mA | 2363 mA | 88 | 10000μF |
| CHB50-24S15 | 18-36 VDC | 15 VDC | 0 mA | 3.33 A | 50 mA | 2363 mA | 88 | 4000μF |
| CHB50-24S24 | 18-36 VDC | 24 VDC | 0 mA | 2.08 A | 50 mA | 2363 mA | 88 | 2000μF |
| CHB50-48S33 | 36-75 VDC | 3.3 VDC | 0 mA | 10 A | 50 mA | 848 mA | 81 | 10000μF |
| CHB50-48S05 | 36-75 VDC | 5 VDC | 0 mA | 10 A | 50 mA | 1240 mA | 84 | 10000μF |
| CHB50-48S12 | 36-75 VDC | 12 VDC | 0 mA | 4.16 A | 50 mA | 1181 mA | 88 | 10000μF |
| CHB50-48S15 | 36-75 VDC | 15 VDC | 0 mA | 3.33 A | 50 mA | 1181 mA | 88 | 4000μF |
| CHB50-48S24 | 36-75 VDC | 24 VDC | 0 mA | 2.08 A | 50 mA | 1168 mA | 89 | 2000μF |

## Remote On/Off Control

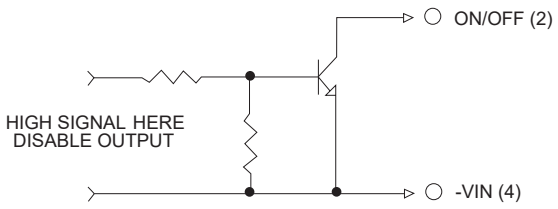


## External Output Trim

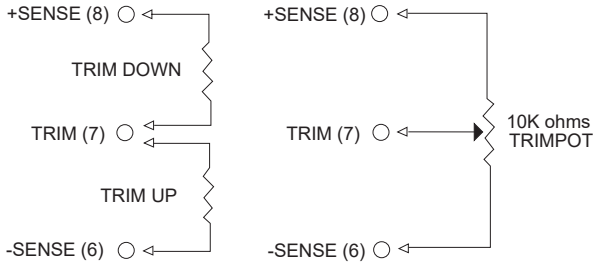


## Specifications

All Specifications Typical At Nominal Line, Full Load, and 25˚C Unless Otherwise Noted

### INPUT SPECIFICATIONS

| | | |
|---|---|---|
| Input Voltage Range | | 12V ..... 9-18V |
| | | 24V ..... 18-36V |
| | | 48V ..... 36-75V |
| Input Surge Voltage (100ms max.) | | 12V ..... 25Vdc max. |
| | | 24V ..... 50Vdc max. |
| | | 48V ..... 100Vdc max. |
| Under Voltage Lockout: | | |
| | 12Vin | power up ..... >8.8V |
| | | power down ..... >8V |
| | 24Vin | power up ..... >17V |
| | | power down ..... >16V |
| | 48Vin | power up ..... >34V |
| | | power down ..... >32.5V |
| Positive Logic Remote On/Off | | See note 3 & 4 |
| Input Filter | | Pi Type |

### OUTPUT SPECIFICATIONS

| | | |
|---|---|---|
| Voltage Accuracy | | ±1.0% max. |
| Transient Response: 25% Step Load Change | | < 500µs |
| External Trim Adj. Range˚C | | ±10%/˚C |
| Ripple & Noise, 20MHz BW(see note 5) | | |
| | 3.3V & 5V | 20mV RMS max. |
| | | 75mV pk-pk max. |
| | 12V & 15V | 30mV RMS max. |
| | | 100mV pk-pk max. |
| | 24V | 100mV RMS max. |
| | | 240mV pk-pk max. |
| Temperature Coefficient | | ±0.03%/°C |
| Short Circuit Protection Line | | Continuous |
| Regulation (see note 1) Load | | ±0.2% max. |
| Regulation (see note 2) | | ±0.2% max. |
| Over Voltage Protection Trip Range, % Vo nom. | | 115-140% |
| Current Limit | | 110%-150% Nominal Output |
| Start up time | | 5ms typ. |

### GENERAL SPECIFICATIONS

| | |
|---|---|
| Efficiency | See Table |
| Isolation Voltage | Input/Output ..... 1500VDC min. |
| | Input/Case ..... 1500VDC min. |
| | Output/Case ..... 1500VDC min. |
| Isolation Capacitance | 1000pF typ. |
| Isolation Resistance | $10^7$ ohm min. |
| Switching Frequency | (12/24)Vin ..... 400KHz typ. |
| | 48Vin ..... 300KHz typ. |
| Operating Case Temperature | -40˚C to 100˚C |
| Storage Temperature | -55˚C to +105˚C |
| Thermal Shutdown Case Temp. | 100˚C typ. |
| Humidity | 95% RH max. Non condensing |
| MTBF .....MIL-STD-217F, GB, 25˚C, Full Load | 1000Khrs typ. |
| Dimensions | 2.28 × 2.40 x 0.50 inches |
| | (57.9 x 61.0 × 12.7 mm) |
| Case Material | Aluminum |
| Weight | 88 g |

### NOTE

1. Measured from high line to low line.
2. Measured from full load to zero load.
3. Logic compatibility ..... open collector ref to –Input
   Module On ..... open circuit
   Module Off ..... < 0.8VDC
4. Suffix "N" to the model number with negative logic remote On/Off.
5. Output ripple and noise measured with 10µF tantalum and 1µF ceramic capacitor across output.
6. Suffix "-C" to the model number with clear mounting Insert (3.2mm DIA.)
7. ON/OFF Pin is not directly applied voltage, please refer to remote on / off control circuit.

# CHB50W SERIES
## 33-50 WATT, 4:1 INPUT RANGE

### Features

- 33W-50W Isolated Output
- Efficiency to 87%
- 300KHz Switching Frequency
- 4 : 1 Input Range
- Regulated Outputs
- Continuous Short Circuit Protection
- Five-Sided Shield Metal Case
- Half-Brick Size Meet Industrial Standard
- CE Mark Meets 2004/108/EC
- UL60950-1 Approval (Except 28 Vout)
- Safety Meets UL60950-1, EN60950-1 and IEC60950-1

E176177

### Mechanical Dimensions

All Dimensions in Inches (mm)
Tolerance Inches: X.XX=±0.02 , X.XXX=±0.010
Millimeters: X.X=±0.5 , X.XX=±0.25

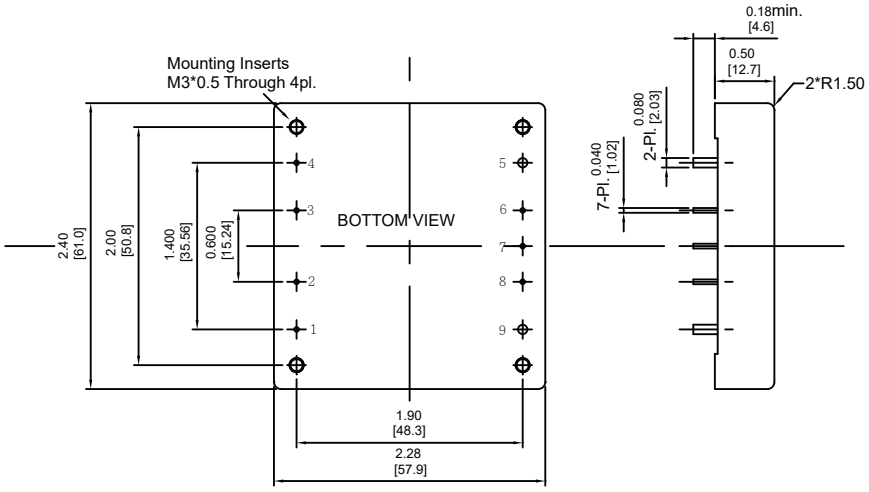


| PIN CONNECTION | |
|---|---|
| PIN | Function |
| 1 | +V Input |
| 2 | On/Off |
| 3 | Case |
| 4 | -V Input |
| 5 | -V Output |
| 6 | -Sense |
| 7 | Trim |
| 8 | +Sense |
| 9 | +V Output |

| MODEL NUMBER | INPUT VOLTAGE | OUTPUT VOLTAGE | OUTPUT CURRENT | | INPUT CURRENT | | % EFF. | CAPACITOR LOAD MAX. |
|---|---|---|---|---|---|---|---|---|
| | | | MIN. | MAX. | NO LOAD | FULL LOAD | | |
| CHB50W-24S33 | 9-36 VDC | 3.3 VDC | 0 mA | 10 A | 50 mA | 1740 mA | 79 | 10000μF |
| CHB50W-24S05 | 9-36 VDC | 5 VDC | 0 mA | 10 A | 50 mA | 2570 mA | 81 | 10000μF |
| CHB50W-24S12 | 9-36 VDC | 12 VDC | 0 mA | 4.16 A | 50 mA | 2510 mA | 83 | 4160μF |
| CHB50W-24S15 | 9-36 VDC | 15 VDC | 0 mA | 3.33 A | 50 mA | 2448 mA | 85 | 3330μF |
| CHB50W-24S24 | 9-36 VDC | 24 VDC | 0 mA | 2.08 A | 50 mA | 2476 mA | 84 | 2080μF |
| CHB50W-24S28 | 9-36 VDC | 28 VDC | 0 mA | 1.78 A | 50 mA | 2510 mA | 83 | 1780μF |
| CHB50W-24S48 | 9-36 VDC | 48 VDC | 0 mA | 1.04 A | 50 mA | 2506 mA | 83 | 1040μF |
| CHB50W-48S33 | 18-75 VDC | 3.3 VDC | 0 mA | 10 A | 50 mA | 848 mA | 81 | 10000μF |
| CHB50W-48S05 | 18-75 VDC | 5 VDC | 0 mA | 10 A | 50 mA | 1255 mA | 83 | 10000μF |
| CHB50W-48S12 | 18-75 VDC | 12 VDC | 0 mA | 4.16 A | 50 mA | 1223 mA | 85 | 4160μF |
| CHB50W-48S15 | 18-75 VDC | 15 VDC | 0 mA | 3.33 A | 50 mA | 1196 mA | 87 | 3330μF |
| CHB50W-48S24 | 18-75 VDC | 24 VDC | 0 mA | 2.08 A | 50 mA | 1209 mA | 86 | 2080μF |
| CHB50W-48S28 | 18-75 VDC | 28 VDC | 0 mA | 1.78 A | 50 mA | 1223 mA | 85 | 1780μF |
| CHB50W-48S48 | 18-75 VDC | 48 VDC | 0 mA | 1.04 A | 50 mA | 1238 mA | 84 | 1040μF |

NOTE: 1. Nominal Input Voltage 24, 48VDC

## Remote On/Off Control

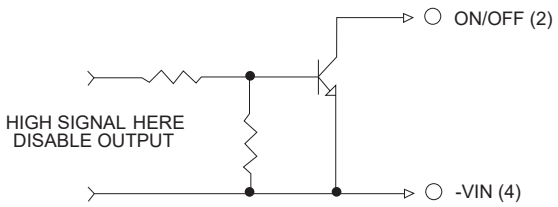


## External Output Trim

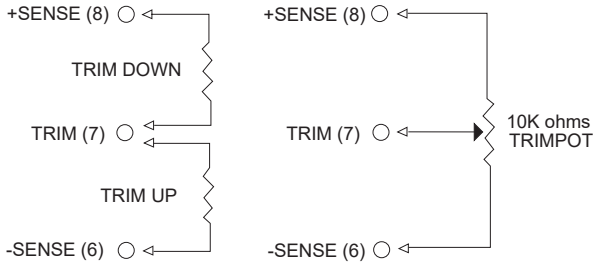


## Specifications

All Specifications Typical At Nominal Line, Full Load, and 25˚C Unless Otherwise Noted

### INPUT SPECIFICATIONS

| | | |
|---|---|---|
| Input Voltage Range | | 24V ..... 9-36V |
| | | 48V ..... 18-75V |
| Input Surge Voltage (100ms max.) | | 24V ..... 50Vdc max. |
| | | 48V ..... 100Vdc max. |
| Under Voltage Lockout: | | |
| | 24Vin | power up ..... 8.8V |
| | | power down ..... 8V |
| | 48Vin | power up ..... 17V |
| | | power down ..... 16V |
| Positive Logic Remote On/Off | | See note 3 & 4 |
| Input Filter | | Pi Type |

### OUTPUT SPECIFICATIONS

| | |
|---|---|
| Voltage Accuracy (note 7) | ±1.0% max. |
| Transient Response: 25% Step Load Change | < 500µs |
| External Trim Adj. Range | ±10% |
| Ripple & Noise, 20MHz BW (note 5) | |
| 3.3V & 5V | 40mV RMS max., 100mV pk-pk max. |
| 12V & 15V | 60mV RMS max., 150mV pk-pk max. |
| 24V | 100mV RMS max., 240mV pk-pk max. |
| 28V | 100mV RMS max., 280mV pk-pk max. |
| 48V | 200mV RMS max., 480mV pk-pk max. |
| Temperature Coefficient | ±0.03%/°C |
| Short Circuit Protection | Continuous |
| Line Regulation (note 1 & 7) | ±0.2% max. |
| Load Regulation (note 2 & 7) | ±0.2% max. |
| Over Voltage Protection Trip Range, % Vo nom. | 115-140% |
| Current Limit | 110% -160% Nominal Output |
| Start up time | 5ms typ. |

### GENERAL SPECIFICATIONS

| | |
|---|---|
| Efficiency | See Table |
| Isolation Voltage | nput/Output..... 1500VDC min. |
| | Input/Case..... 1500VDC min. |
| | Output/Case ..... 1500VDC min. |
| Isolation Resistance | $10^7$ ohm min. |
| Isolation Capacitance | 1000pF typ. |
| Switching Frequency | 300KHz typ. |
| Operating Case Temperature | -40˚C to 100˚C |
| Storage Temperature | -55˚C to +105˚C |
| Thermal Shutdown Case Temp. | 100˚C typ. |
| Humidity | 95% RH max. Non condensing |
| MTBF ..... MIL-STD-217F, GB, 25˚C, Full Load | 1000Khrs typ. |
| Dimensions | 2.28 x 2.40 x 0.50 inches (57.9 x 61.0 x 12.7 mm) |
| Case Material | Aluminum |
| Weight | 94 g |

### NOTE

1. Measured from high line to low line.
2. Measured from full load to zero load.
3. Logic compatibility ..... open collector ref to -input
   Module On ..... >3.5VDC to 75VDC or open circuit
   Module Off ..... < 0.8VDC
4. Suffix "N" to the model number with negative logic remote On/Off.
   Module On ..... < 0.8VDC
   Module Off ..... >3.5VDC to 75VDC or open circuit
5. Output ripple and noise measured with 10µF tantalum and 1µF ceramic capacitor across output. (48V: 1µF ceramic cap. only)
6. Suffix "-C" to the model number with clear mounting insert (3.2mm DIA.)
7. Require a 47µF aluminum capacitor connected between +Vout and –Vout for 48Vout models.

# CHB75 SERIES
## 49.5-75 WATT

### Features

- 49.5W-75W Isolated Output
- Efficiency to 89%
- 300/400KHz Switching Frequency
- 2 : 1 Input Range
- Regulated Outputs
- Continuous Short Circuit Protection
- Five-Sided Metal Case
- Half-Brick Size Meet Industrial Standard
- Safety Meets UL60950-1, EN60950-1 and IEC60950-1
- UL60950-1 Approval

E176177

### Mechanical Dimensions

All Dimensions in Inches (mm)
Tolerance Inches: X.XX=±0.02 , X.XXX=±0.010
Millimeters: X.X=±0.5 , X.XX=±0.25

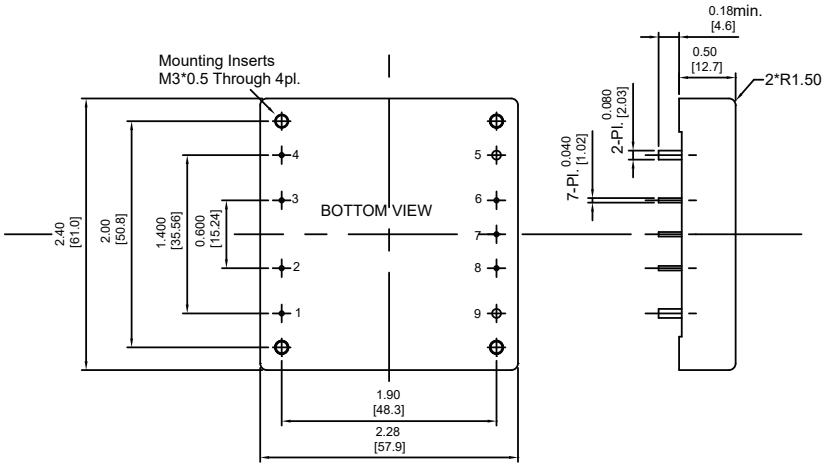


| PIN CONNECTION | |
|---|---|
| PIN | Function |
| 1 | +V Input |
| 2 | On/Off |
| 3 | Case |
| 4 | -V Input |
| 5 | -V Output |
| 6 | -Sense |
| 7 | Trim |
| 8 | +Sense |
| 9 | +V Output |

| MODEL NUMBER | INPUT VOLTAGE | OUTPUT VOLTAGE | OUTPUT CURRENT MIN. | OUTPUT CURRENT MAX. | INPUT CURRENT NO LOAD | INPUT CURRENT FULL LOAD | % EFF. | CAPACITOR LOAD MAX. |
|---|---|---|---|---|---|---|---|---|
| CHB75-12S33 | 9 -18 VDC | 3.3 VDC | 0 mA | 15 A | 50 mA | 5290 mA | 78 | 10000μF |
| CHB75-12S05 | 9 -18 VDC | 5 VDC | 0 mA | 15 A | 50 mA | 7530 mA | 83 | 10000μF |
| CHB75-12S12 | 9 -18 VDC | 12 VDC | 0 mA | 6.25 A | 50 mA | 7183 mA | 87 | 10000μF |
| CHB75-12S15 | 9 -18 VDC | 15 VDC | 0 mA | 5 A | 50 mA | 7267 mA | 86 | 4000μF |
| CHB75-12S24 | 9 -18 VDC | 24 VDC | 0 mA | 3.13 A | 50 mA | 7183 mA | 87 | 2000μF |
| CHB75-24S33 | 18-36 VDC | 3.3 VDC | 0 mA | 15 A | 50 mA | 2578 mA | 80 | 10000μF |
| CHB75-24S05 | 18-36 VDC | 5 VDC | 0 mA | 15 A | 50 mA | 3720 mA | 84 | 10000μF |
| CHB75-24S12 | 18-36 VDC | 12 VDC | 0 mA | 6.25 A | 50 mA | 3551 mA | 88 | 10000μF |
| CHB75-24S15 | 18-36 VDC | 15 VDC | 0 mA | 5 A | 50 mA | 3551 mA | 88 | 4000μF |
| CHB75-24S24 | 18-36 VDC | 24 VDC | 0 mA | 3.13 A | 50 mA | 3551 mA | 88 | 2000μF |
| CHB75-48S33 | 36-75 VDC | 3.3 VDC | 0 mA | 15 A | 50 mA | 1273 mA | 81 | 10000μF |
| CHB75-48S05 | 36-75 VDC | 5 VDC | 0 mA | 15 A | 50 mA | 1860 mA | 84 | 10000μF |
| CHB75-48S12 | 36-75 VDC | 12 VDC | 0 mA | 6.25 A | 50 mA | 1755 mA | 89 | 10000μF |
| CHB75-48S15 | 36-75 VDC | 15 VDC | 0 mA | 5 A | 50 mA | 1775 mA | 88 | 4000μF |
| CHB75-48S24 | 36-75 VDC | 24 VDC | 0 mA | 3.13 A | 50 mA | 1755 mA | 89 | 2000μF |

NOTE: 1. Nominal Input Voltage 12, 24 or 48VDC

## Remote On/Off Control

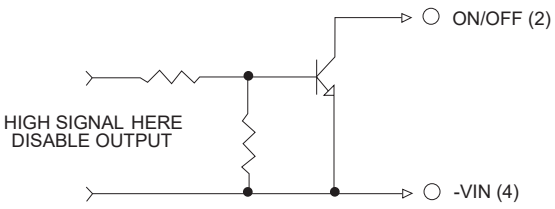


## External Output Trim

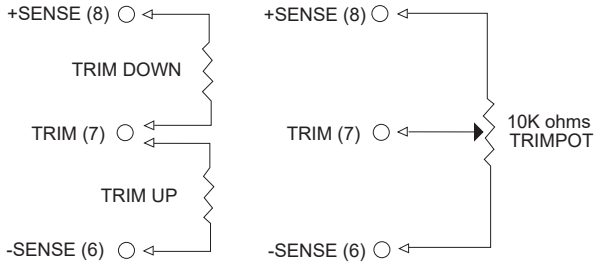


## Specifications

All Specifications Typical At Nominal Line, Full Load, and 25˚C Unless Otherwise Noted

### INPUT SPECIFICATIONS

| | | |
|---|---|---|
| Input Voltage Range | | 12V ..... 9-18V |
| | | 24V ..... 18-36V |
| | | 48V .....36-75V |
| Input Surge Voltage (100ms max.) | | 12V ..... 25Vdc max. |
| | | 24V ..... 50Vdc max. |
| | | 48V ..... 100Vdc max. |
| Under Voltage Lockout : | | |
| | 12Vin | power up .....>8.8V |
| | | power down ..... >8V |
| | 24Vin | power up ..... >17V |
| | | power down ..... >16V |
| | 48Vin | power up ..... >34V |
| | | power down ..... >32.5V |
| Positive Logic Remote On/Off | | See note 3 & 4 |
| Input Filter | | Pi Type |

### OUTPUT SPECIFICATIONS

| | |
|---|---|
| Voltage Accuracy | ±1.0% max. |
| Transient Response:25% Step Load Change | < 500µs. |
| External Trim Adj. Range | ±10 % |
| Ripple & Noise, 20MHz BW (see note 5) | |
| 3.3V & 5V | 20mV RMS max. |
| | 75mV pk-pk max. |
| 12V & 15V | 30mV RMS max. |
| | 100mV pk-pk max. |
| 24V | 100mV RMS max. |
| | 240mV pk-pk max. |
| Temperature Coefficient | ±0.03%/°C |
| Short Circuit Protection | Continuous |
| Line Regulation (see note1) | ±0.2% max. |
| Load Regulation (see note2) | ±0.2% max. |
| Over Voltage Protection Trip Range, % Vo nom. | 115-140% |
| Current Limit | 110%-150% Nominal Output |
| Start up time | 5ms typ. |

### GENERAL SPECIFICATIONS

| | |
|---|---|
| Efficiency | See Table |
| Isolation Voltage | Input/Output ..... 1500VDC min. |
| | Input/Case ..... 1500VDC min. |
| | Output/Case ..... 1500VDC min. |
| Isolation Resistance | $10^7$ ohm min. |
| Isolation Capacitance | 1000pF typ. |
| Switching Frequency | (12/24)Vin ..... 400KHz typ. |
| | 48Vin ..... 300KHz typ. |
| Operating Case Temperature | -40˚C to 100˚C |
| Storage Temperature | -55˚C to +105˚C |
| Thermal Shutdown Case Temp. | 100˚C typ. |
| Humidity | 95% RH max. Non condensing |
| MTBF ..... MIL-STD-217F, GB, 25˚C , Full Load | 1000Khrs typ. |
| Dimensions | 2.28 × 2.40 x 0.50 inches |
| | (57.9 x 61.0 × 12.7 mm) |
| Case Material | Aluminum |
| Weight | 92 g |

### NOTE

1. Measured from high line to low line.
2. Measured from full load to zero load.
3. Logic compatibility ..... open collector ref to –Input
   Module On ..... open circuit
   Module Off ..... < 0.8VDC
4. Suffix "N" to the model number with negative logic remote on/off.
5. Output ripple and noise measured with 10µF tantalum and 1µF ceramic capacitor across output.
6. Suffix "-C" to the model number with clear mounting Insert (3.2mm DIA.)
7. On/Off Pin is not directly applied voltage, please refer to remote On / Off control circuit.

# CHB75W SERIES
## 49.5-75 WATT, 4:1 INPUT RANGE

### Features

- 49.5W-75W Isolated Output
- Efficiency to 85%
- 300KHz Switching Frequency
- 4 : 1 Wide Input Range
- Regulated Outputs
- Continuous Short Circuit Protection
- Five-Sided Metal Case
- Half-Brick Size Meet Industrial Standard
- Safety Meets UL60950-1, EN60950-1, and IEC60950-1
- UL60950-1 Approval (Except 28 Vout)

E176177

### Mechanical Dimensions

All Dimensions in Inches (mm)
Tolerance Inches: X.XX=±0.02 , X.XXX=±0.010
Millimeters: X.X=±0.5 , X.XX=±0.25

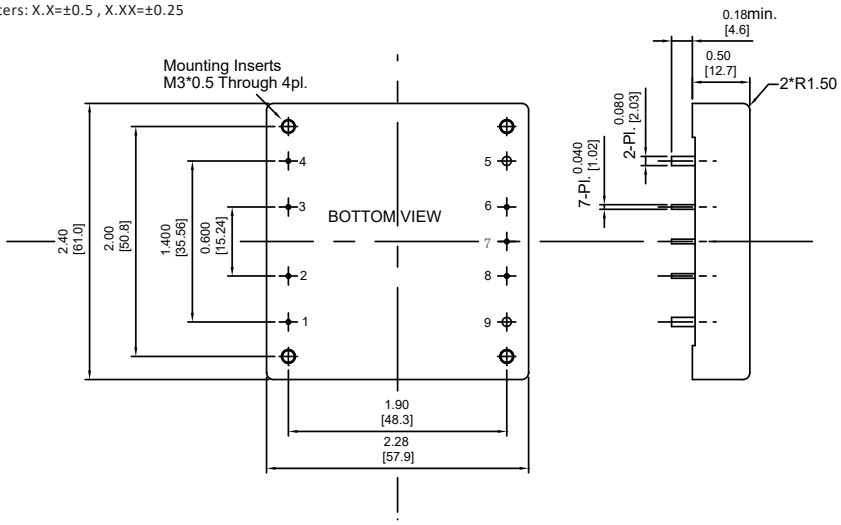


| PIN CONNECTION | |
|---|---|
| PIN | Function |
| 1 | +V Input |
| 2 | On/Off |
| 3 | Case |
| 4 | -V Input |
| 5 | -V Output |
| 6 | -Sense |
| 7 | Trim |
| 8 | +Sense |
| 9 | +V Output |

| MODEL NUMBER | INPUT VOLTAGE | OUTPUT VOLTAGE | OUTPUT CURRENT MIN. | OUTPUT CURRENT MAX. | INPUT CURRENT NO LOAD | INPUT CURRENT FULL LOAD | % EFF. | CAPACITOR LOAD MAX. |
|---|---|---|---|---|---|---|---|---|
| CHB75W-24S33 | 9-36 VDC | 3.3 VDC | 0 mA | 15 A | 50 mA | 2611 mA | 79 | 15000µF |
| CHB75W-24S05 | 9-36 VDC | 5 VDC | 0 mA | 15 A | 50 mA | 3811 mA | 82 | 15000µF |
| CHB75W-24S12 | 9-36 VDC | 12 VDC | 0 mA | 6.25 A | 50 mA | 3765 mA | 83 | 6250µF |
| CHB75W-24S15 | 9-36 VDC | 15 VDC | 0 mA | 5 A | 50 mA | 3720 mA | 84 | 5000µF |
| CHB75W-24S24 | 9-36 VDC | 24 VDC | 0 mA | 3.12 A | 50 mA | 3720 mA | 84 | 3120µF |
| CHB75W-24S28 | 9-36 VDC | 28 VDC | 0 mA | 2.67 A | 50 mA | 3720 mA | 84 | 2670µF |
| CHB75W-24S48 | 9-36 VDC | 48 VDC | 0 mA | 1.56 A | 50 mA | 3811 mA | 82 | 1560µF |
| CHB75W-48S33 | 18-75 VDC | 3.3 VDC | 0 mA | 15 A | 50 mA | 1289 mA | 80 | 15000µF |
| CHB75W-48S05 | 18-75 VDC | 5 VDC | 0 mA | 15 A | 50 mA | 1883 mA | 83 | 15000µF |
| CHB75W-48S12 | 18-75 VDC | 12 VDC | 0 mA | 6.25 A | 50 mA | 1860 mA | 84 | 6250µF |
| CHB75W-48S15 | 18-75 VDC | 15 VDC | 0 mA | 5 A | 50 mA | 1838 mA | 85 | 5000µF |
| CHB75W-48S24 | 18-75 VDC | 24 VDC | 0 mA | 3.12 A | 50 mA | 1835 mA | 85 | 3120µF |
| CHB75W-48S28 | 18-75 VDC | 28 VDC | 0 mA | 2.67 A | 50 mA | 1835 mA | 85 | 2670µF |
| CHB75W-48S48 | 18-75 VDC | 48 VDC | 0 mA | 1.56 A | 50 mA | 1860 mA | 84 | 1560µF |

NOTE: 1. Nominal Input Voltage 24, 48VDC

## Remote On/Off Control

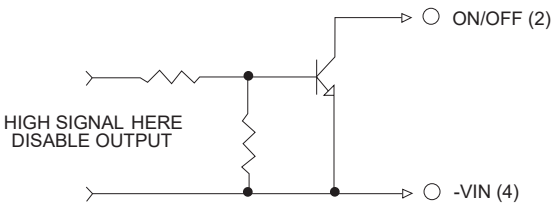


## External Output Trim

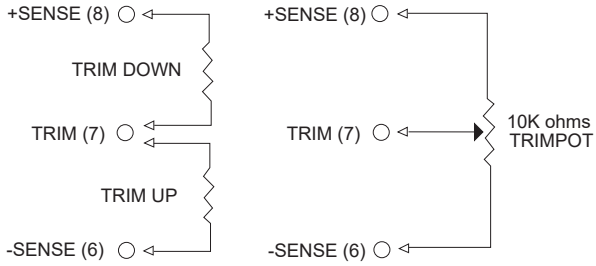


## Specifications

All Specifications Typical At Nominal Line, Full Load, and 25˚C Unless Otherwise Noted

### INPUT SPECIFICATIONS

| | | |
|---|---|---|
| Input Voltage Range | | 24V ..... 9-36V |
| | | 48V ..... 18-75V |
| Input Surge Voltage (100ms max.) | | 24V ..... 50Vdc max. |
| | | 48V ..... 100Vdc max. |
| Under Voltage Lockout | 24Vin | power up ..... 8.8V |
| | | power down ..... 8.0V |
| | 48Vin | power up ..... 17V |
| | | power down ..... 16V |
| Positive Logic Remote On/Off | | See note 3 & 4 |
| Input Filter | | Pi Type |

### OUTPUT SPECIFICATIONS

| | |
|---|---|
| Voltage Accuracy | ±1.0% max. |
| Transient Response: 25% Step Load Change | < 500µs |
| External Trim Adj. Range | ±10% |
| Ripple & Noise, 20MHz BW (see note 5) | |
| 3.3V & 5V | 40mV RMS max., 100mV pk-pk max. |
| 12V & 15V | 60mV RMS max., 150mV pk-pk max. |
| 24V | 100mV RMS max., 240mV pk-pk max. |
| 28V | 100mV RMS max., 280mV pk-pk max. |
| 48V | 200mV RMS max., 480mV pk-pk max. |
| Temperature Coefficient | ±0.03%/°C |
| Short Circuit Protection | Continuous |
| Line Regulation (note 1& 7) | ±0.2% max. |
| Load Regulation (note 2& 7) | ±0.2% max. |
| Over Voltage Protection Trip Range, % Vo nom. | 115-140% |
| Current Limit | 110%-160% Nominal Output |
| Start up time | 5ms typ. |

### GENERAL SPECIFICATIONS

| | |
|---|---|
| Efficiency | See Table |
| Isolation Voltage | Input/Output ..... 1500VDC min. |
| | Input/Case..... 1500VDC min. |
| | Output/Case ..... 1500VDC min. |
| Isolation Resistance | $10^7$ ohm min. |
| Isolation Capacitance | 1000pF typ. |
| Switching Frequency | 300KHz typ. |
| Operating Case Temperature | -40˚C to 100˚C |
| Storage Temperature | -55˚C to +105˚C |
| Thermal Shutdown Case Temp. | 100˚C typ. |
| Humidity | 95% RH max. Non condensing |
| MTBF ..... MIL-STD-217F, GB, 25˚C, Full Load | 1000Khrs typ. |
| Dimensions | 2.28 x 2.40 x 0.50 inches (57.9 x 61.0 x 12.7 mm) |
| Case Material | Aluminum |
| Weight | 94 g |

### NOTE

1. Measured from high line to low line.
2. Measured from full load to zero load.
3. Logic compatibility ..... open collector ref to -input
   Module On ..... >3.5VDC to 75VDC or open circuit
   Module Off ..... < 0.8VDC
4. Suffix "N" to the model number with negative logic remote on/off
   Module On ..... < 0.8VDC
   Module Off ..... >3.5VDC to 75VDC or open circuit
5. Output ripple and noise measured with 10µF tantalum and 1µF ceramic capacitor across output. (48V: 1µF ceramic cap. only)
6. Suffix "-C" to the model number with clear mounting insert. (3.2mm DIA.)
7. Require a 47µF aluminum capacitor connected between +Vout and -Vout for 48Vout models.

# CHB75 Dual SERIES
## 75 WATT, DUAL OUTPUTS

### Features

- 75W Isolated Output
- Efficiency to 84%
- 400KHz Switching Frequency
- 2 : 1 Input Range
- Regulated Outputs
- Continuous Short Circuit Protection
- Half-Brick Size Meet Industrial Standard
- Total Power 75W with 15A Maximum Per Channel
- UL60950-1 Approval

E176177

### Mechanical Dimensions

All Dimensions in Inches (mm)
Tolerance Inches: X.XX=±0.02 , X.XXX=±0.010
Millimeters: X.X=±0.5 , X.XX=±0.25

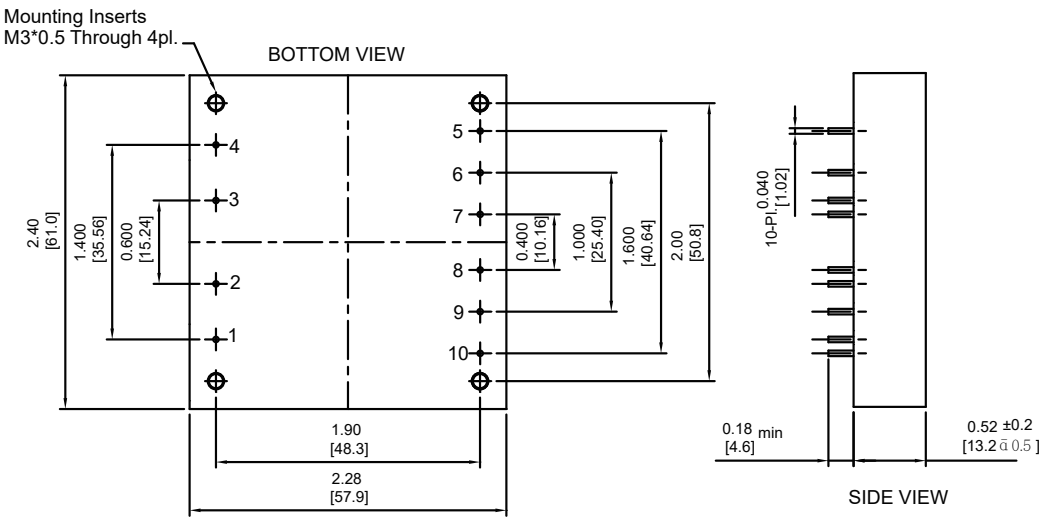


| PIN CONNECTION | |
|---|---|
| PIN | Function |
| 1 | +V Input |
| 2 | On/Off |
| 3 | Case |
| 4 | -V Input |
| 5 | -Vo2 |
| 6 | -Vo2 |
| 7 | -Vo2 Trim |
| 8 | +Vo1 |
| 9 | -Vo1 |
| 10 | Vo1 Trim |

| MODEL NUMBER | INPUT VOLTAGE | OUTPUT VOLTAGE | OUTPUT CURRENT MIN. | OUTPUT CURRENT MAX. | INPUT CURRENT NO LOAD | INPUT CURRENT FULL LOAD | % EFF. | CAPACITOR LOAD MAX. |
|---|---|---|---|---|---|---|---|---|
| CHB75-24D05-3V3 | 18-36 VDC | VO1= 5 V<br>VO2= 3.3 V | 0 A<br>0 A | 15 A<br>15 A | 50 mA | 3765 mA | 83%(2) | 15000µF |
| CHB75-24D05-2V5 | 18-36 VDC | VO1= 5 V<br>VO2= 2.5 V | 0 A<br>0 A | 15 A<br>15 A | 50 mA | 3765 mA | 83%(2) | 15000µF |
| CHB75-48D05-3V3 | 36-75 VDC | VO1= 5 V<br>VO2= 3.3 V | 0 A<br>0 A | 15 A<br>15 A | 30 mA | 1860 mA | 84%(2) | 15000µF |
| CHB75-48D05-2V5 | 36-75 VDC | VO1= 5 V<br>VO2= 2.5 V | 0 A<br>0 A | 15 A<br>15 A | 30 mA | 1860 mA | 84%(2) | 15000µF |

NOTE:
1. Nominal Input Voltage 24, 48VDC
2. Measured with 15A Load on Vo1

## Remote On/Off Control

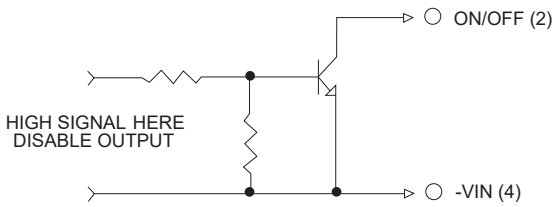


## External Output Trim

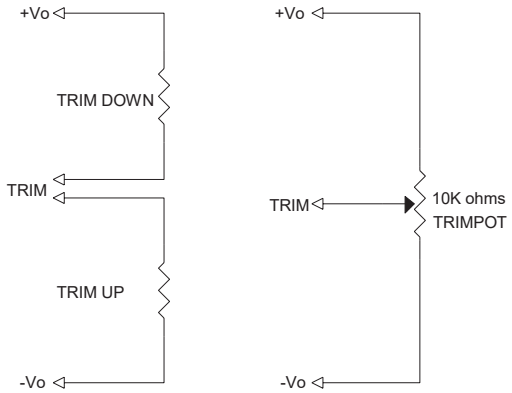


## Specifications

All Specifications Typical At Nominal Line, Full Load, and 25˚C Unless Otherwise Noted

### INPUT SPECIFICATIONS

| | | |
|---|---|---|
| Input Voltage Range | | 24V ..... 18-36V |
| | | 48V ..... 36-75V |
| Input Surge Voltage (100ms max.) | | 24V ..... 50Vdc max. |
| | | 48V ..... 100Vdc max. |
| Under Voltage Lockout | 24Vin | power up ..... 17V |
| | | power down ..... 15.5V |
| | 48Vin | power up ..... 34V |
| | | power down ..... 32.5V |
| Positive Logic Remote On/Off | | See note 4 & 5 |
| Input Filter | | Pi Type |

### OUTPUT SPECIFICATIONS

| | |
|---|---|
| Voltage Accuracy | ±2% max. |
| Transient Response: 25% Step Load Change | < 500µs |
| External Trim Adj. Range, Each Output | ±5% |
| Ripple & Noise, 20MHz BW (note 6) | 40mV RMS max. |
| | 100mV pk-pk max. |
| Temperature Coefficient | ±0.03%/°C |
| Short Circuit Protection | Continuous |
| Line Regulation (note 1) | ±0.2% max. |
| Load Regulation (note 2) | ±0.5% max. |
| Over Voltage Protection Trip Range, % Vo nom. | 115-140% |
| Current Limit (note 3) | 110%-140% Nominal Output |
| Start up time | 20ms typ. |

### GENERAL SPECIFICATIONS

| | |
|---|---|
| Efficiency | See Table |
| Isolation Voltage | Input/Output ..... 1500VDC min. |
| | Input/Case ..... 1500VDC min. |
| | Output/Case ..... 1500VDC min. |
| Isolation Resistance | $10^7$ ohm min. |
| Isolation Capacitance | 1000pF typ. |
| Switching Frequency | 400KHz typ. |
| Operating Case Temperature | -40˚C to 100˚C |
| Storage Temperature | -55˚C to +105˚C |
| Humidity | 95% RH max. Non condensing |
| MTBF ..... MIL-HDBK-217F, GB, 25˚C, Full Load | 700 Khrs typ. |
| Thermal Shutdown Range Case Temp. | 100˚C typ. |
| Dimensions | 2.28 × 2.40 x 0.52 inches |
| | (57.9 x 61.0 x 13.2 mm) |
| Case Material | Aluminum Baseplate with |
| | Plastic Case |
| Weight | 108 g |

### NOTE

1. Measured from high line to low line.
2. Measured from full load to min. load.
3. Measured with output current on output1 (Vo1)
4. Logic compatibility ..... open collector refer to –Input
   Module On ..... open circuit
   Module Off ..... < 0.8VDC
5. Suffix "N" to the model number with negative logic remote On/Off.
6. The output noise is measured with 10µF tantalum and 1µF ceramic capacitor across output.
7. Suffix "-C" to the model number with clear mounting insert (3.2mm DIA.)

# CHB100 SERIES
## 66-100 WATT

## Features

- 66W-100W Isolated Output
- Efficiency to 89%
- 500KHz Switching Frequency
- 2 : 1 Input Range
- Regulated Outputs
- Continuous Short Circuit Protection
- Five-Sided Metal Case
- Half-Brick Size Meet Industrial Standard
- UL60950-1 Approval
- Without Tantalum Capacitor Inside (V2.X Only, with TC Label)

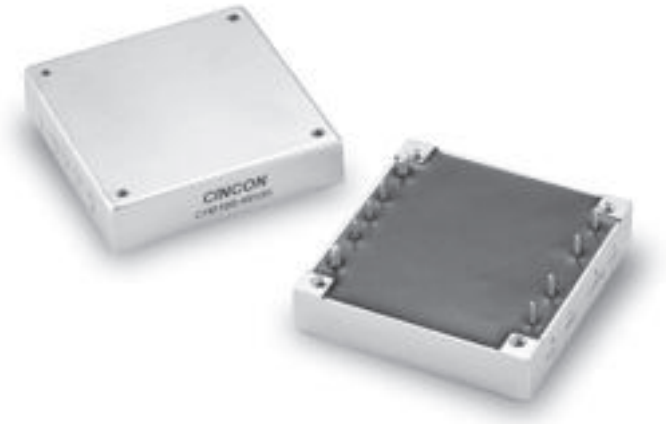

E176177

## Mechanical Dimensions

All Dimensions in Inches (mm)
Tolerance Inches: X.XX=±0.02 , X.XXX=±0.010
Millimeters: X.X=±0.5 , X.XX=±0.25

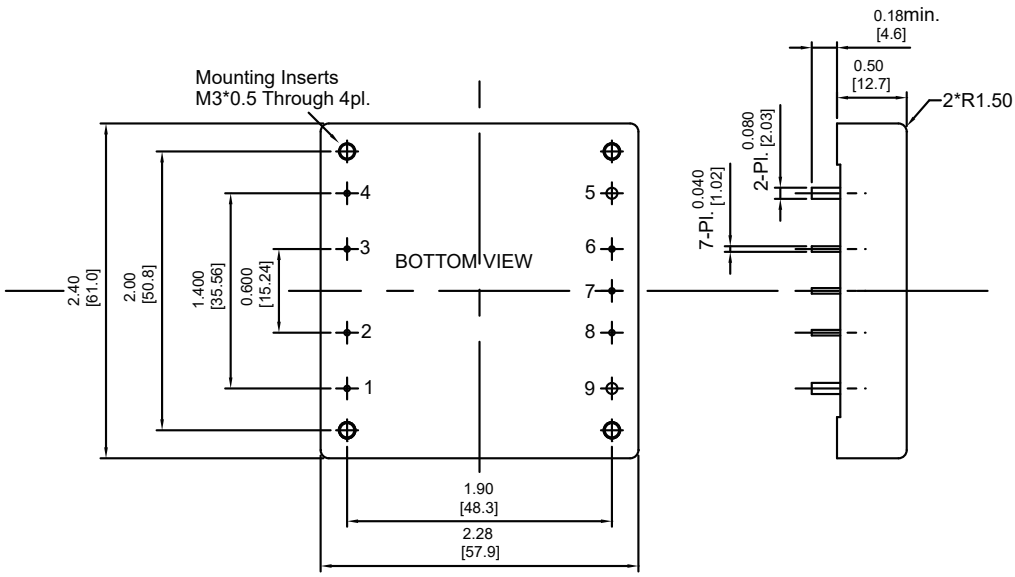


| PIN CONNECTION | |
|---|---|
| PIN | Function |
| 1 | +V Input |
| 2 | On/Off |
| 3 | Case |
| 4 | -V Input |
| 5 | -V Output |
| 6 | -Sense |
| 7 | Trim |
| 8 | +Sense |
| 9 | +V Output |

| MODEL NUMBER | INPUT VOLTAGE | OUTPUT VOLTAGE | OUTPUT CURRENT MIN. | OUTPUT CURRENT MAX. | INPUT CURRENT NO LOAD | INPUT CURRENT FULL LOAD | % EFF. | CAPACITOR LOAD MAX. |
|---|---|---|---|---|---|---|---|---|
| CHB100-24S33 | 18-36 VDC | 3.3 VDC | 0 mA | 20 A | 50 mA | 3313 mA | 83 | 20000μF |
| CHB100-24S05 | 18-36 VDC | 5 VDC | 0 mA | 20 A | 50 mA | 4960 mA | 84 | 20000μF |
| CHB100-24S12 | 18-36 VDC | 12 VDC | 0 mA | 8.3 A | 50 mA | 4770 mA | 87 | 8300μF |
| CHB100-24S15 | 18-36 VDC | 15 VDC | 0 mA | 6.7 A | 50 mA | 4758 mA | 88 | 6700μF |
| CHB100-24S24 | 18-36 VDC | 24 VDC | 0 mA | 4.17 A | 50 mA | 4793 mA | 87 | 4170μF |
| CHB100-48S33 | 36-75 VDC | 3.3 VDC | 0 mA | 20 A | 50 mA | 1676 mA | 82 | 20000μF |
| CHB100-48S05 | 36-75 VDC | 5 VDC | 0 mA | 20 A | 50 mA | 2422 mA | 86 | 20000μF |
| CHB100-48S12 | 36-75 VDC | 12 VDC | 0 mA | 8.3 A | 50 mA | 2331 mA | 89 | 8300μF |
| CHB100-48S15 | 36-75 VDC | 15 VDC | 0 mA | 6.7 A | 50 mA | 2352 mA | 89 | 6700μF |
| CHB100-48S24 | 36-75 VDC | 24 VDC | 0 mA | 4.17 A | 50 mA | 2369 mA | 88 | 4170μF |

NOTE: 1. Nominal Input Voltage 24 or 48VDC

## Remote On/Off Control

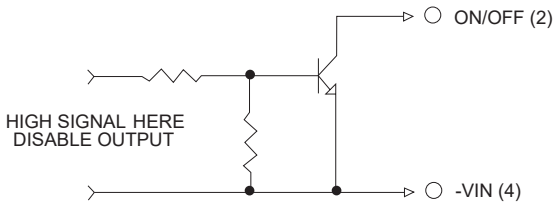


## External Output Trim

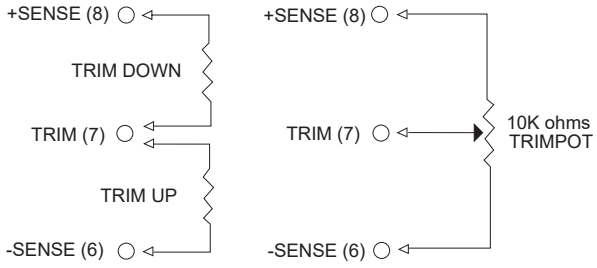


## Specifications

All Specifications Typical At Nominal Line, Full Load, and 25˚C Unless Otherwise Noted

### INPUT SPECIFICATIONS

| | | |
|---|---|---|
| Input Voltage Range | | 24V.....18-36V |
| | | 48V.....36-75V |
| Input Surge Voltage (100ms max.) | | 24V ..... 50Vdc max. |
| | | 48V ..... 100Vdc max. |
| Under Voltage Lockout: | | |
| | 24Vin | power up ..... >17V |
| | | power down ..... >16V |
| | 48Vin | power up ..... >34V |
| | | power down ..... >32.5V |
| Positive Logic Remote On/Off | | See note 3 & 4 |
| Input Filter | | Pi Type |

### OUTPUT SPECIFICATIONS

| | |
|---|---|
| Voltage Accuracy | ±1.0% max. |
| Transient Response:25% Step Load Change | < 500µs |
| External Trim Adj. Range | ±10% |
| Ripple & Noise, 20MHz BW (note 5) | |
| 3.3V & 5V | 40mV RMS max. |
| | 100mV pk-pk max. |
| 12V & 15V | 60mV RMS max. |
| | 150mV pk-pk max. |
| 24V | 100mV RMS max. |
| | 240mV pk-pk max. |
| Temperature Coefficient | ±0.03%/°C |
| Short Circuit Protection | Continuous |
| Line Regulation (note 1) | ±0.2% max. |
| Load Regulation (note 2) | ±0.2% max. |
| Over Voltage Protection Trip Range ,% Vo nom. | 115-140% |
| Current Limit | 110%-140% Nominal Output |
| Start up time | 5ms typ. |

### GENERAL SPECIFICATIONS

| | |
|---|---|
| Efficiency | See Table |
| Isolation Voltage | Input/Output ..... 1500VDC min. |
| | Input/Case ..... 1500VDC min. |
| | Output/Case ..... 1500VDC min. |
| Isolation Resistance | $10^7$ ohm min. |
| Isolation Capacitance | 1000pF typ. |
| Switching Frequency | 500KHz typ. |
| Operating Case Temperature | -40˚C to +100˚C |
| Storage Temperature | -40˚C to +105˚C |
| Thermal Shutdown Case Temp. | 100˚C typ. |
| Humidity | 95% RH max. Non condensing |
| MTBF ..... MIL-STD-217F, GB, 25˚C, Full Load | 900Khrs typ. |
| Dimensions | 2.28 × 2.40 x 0.50 inches |
| | (57.9 x 61.0 ×12.7 mm) |
| Case Material | Aluminum |
| Weight | 95 g |

### NOTE

1. Measured from high line to low line.
2. Measured from full load to zero load.
3. Logic compatibility .... open collector ref to -Input
   Module On ..... open circuit
   Module Off ..... < 0.8VDC
4. Suffix "N" to the model number with negative logic remote On/Off.
5. Output ripple and noise measured with 10µF tantalum and 1µF ceramic capacitor across output.
6. Suffix "-C" to the model number with clear mounting insert. (3.2mm DIA.)

# CHB100-110S SERIES
## 100 WATT, INPUT RANGE 66-160 VDC

## Features

- 100W Isolated Output
- Efficiency to 89%
- Low No Load Input Power
- 3:1 Input Range
- Regulated Outputs
- Remote On/Off
- Over Temperature Protection
- Over Voltage/Current Protection
- Continuous Short Circuit Protection
- Half Brick Size meets industrial standard
- Meets EN50155 With External Circuits
- Shock & Vibration Meets EN50155 (EN61373)
- Fire & Smoke meet EN45545-2
- 3000m Operating Altitude
- Meets UL60950-1
- LVD Approval

CE Railway System

## Mechanical Dimensions

All Dimensions in Inches (mm)
Tolerance Inches: X.XX=±0.02 , X.XXX=±0.010
Millimeters: X.X=±0.5 , X.XX=±0.25

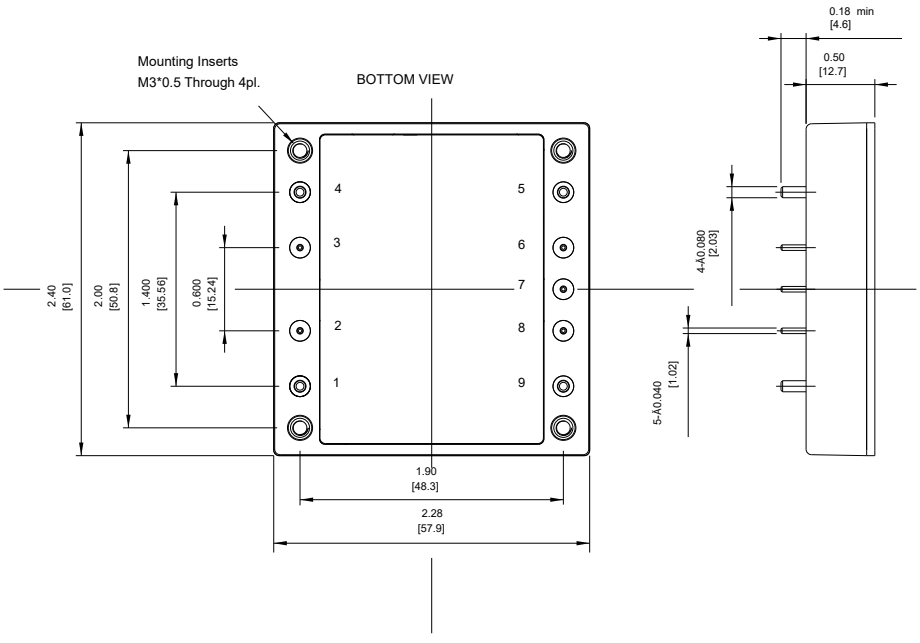


| PIN | Function |
|---|---|
| 1 | +V Input |
| 2 | On/Off |
| 3 | NC |
| 4 | -V Input |
| 5 | -V Output |
| 6 | -Sense |
| 7 | Trim |
| 8 | +Sense |
| 9 | +V Output |

| MODEL NUMBER | INPUT VOLTAGE | OUTPUT VOLTAGE | OUTPUT CURRENT MIN. | OUTPUT CURRENT MAX. | INPUT CURRENT NO LOAD | INPUT CURRENT FULL LOAD | % EFF. | CAPACITOR LOAD MAX. |
|---|---|---|---|---|---|---|---|---|
| CHB100-110S12 | 66-160 VDC | 12 VDC | 0 mA | 8.3 A | 5 mA | 1050 mA | 86.5 | 8300µF |
| CHB100-110S15 | 66-160 VDC | 15 VDC | 0 mA | 6.7 A | 5 mA | 1040 mA | 87.5 | 4170µF |
| CHB100-110S24 | 66-160 VDC | 24 VDC | 0 mA | 4.17 A | 5 mA | 1040 mA | 87.5 | 4170µF |
| CHB100-110S48 | 66-160 VDC | 48 VDC | 0 mA | 2.08 A | 5 mA | 1020 mA | 89 | 1500µF |

NOTE: 1. Nominal Input Voltage 110VDC

## Remote On/Off Control

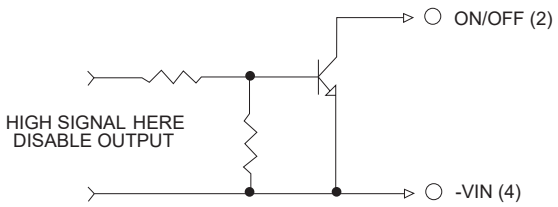


## External Output Trim

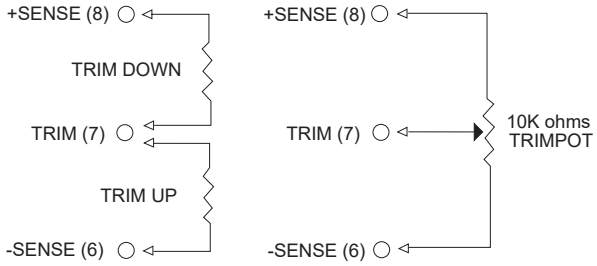


## Specifications

All Specifications Typical At Nominal Line, Full Load, and 25˚C Unless Otherwise Noted

### INPUT SPECIFICATIONS

| | |
|---|---|
| Input Voltage Range | 110V, 66-160V |
| Input Surge Voltage (100ms max.) | 180Vdc max. |
| Under voltage lockout | power up 62V |
| | power down 56V |
| Positive Logic Remote On/Off: | |
| Logic Compatibility | Open Collector ref to -Input |
| Module On | Open Circuit |
| Module Off | 0 to < 1.8Vdc |
| Input Filter | PI Type |

### OUTPUT SPECIFICATIONS

| | |
|---|---|
| Voltage Accuracy | ±1.0% max. |
| Transient Response: | |
| 25% Step Load Change | < 500µs |
| External Trim Adj. Range | ±10% |
| Ripple & Noise, 20MHz BW(note 3) | |
| 12V, 15V | 60mVRMS, 150mVpk-pk max. |
| 24V | 100mVRMS, 240mVpk-pk max. |
| 48V | 200mVRMS, 480mVpk-pk max. |
| Temperature Coefficient | ±0.03%/°C |
| Short Circuit Protection | Continuous |
| Line Regulation (note 1) | ±0.2% max. |
| Load Regulation (note 2) | ±0.2% max. |
| Over Voltage Protection trip Range, % Vo nom. | 115-140% |
| Current Limit | 110%-160% Nominal Output |
| Start up time | 120ms typ. |

### GENERAL SPECIFICATIONS

| | |
|---|---|
| Efficiency | See Table |
| Isolation Voltage | Input/Output ..... 3000Vrms min. |
| | Input/Case.....1500Vrms min. |
| | Output/Case.....500Vrms min. |
| Isolation Resistance | $10^9$ ohm min. |
| Isolation Capacitance | 500pF typ. |
| Switching Frequency | 250KHz typ. |
| Operating Case Temperature Storage | -40°C to 100°C |
| Temperature | -55°C to +105°C |
| Thermal Shutdown, Case Temp. | 105°C typ. |
| Humidity | 95% RH max. Non condensing |
| MTBF | MIL-HDBK-217F, GB, 25°C, Full Load |
| | 700Khrs typ. |
| Safety | Meets UL60950-1 |
| EMI(note 6) | EN50155(EN50121-3-2) |
| | with external filter |
| Shock/Vibration | EN50155 (EN61373) EN50155 |
| Environmental | Meets EN50155(EN60068-2-1) |
| Dimensions | 2.28 × 2.40 x 0.50 inches |
| | (57.9 x 61.0 × 12.7 mm) |
| Case Material | Aluminum Baseplate with Plastic Case |
| Weight | 95g |

### NOTE

1. Measured from high line to low line.
2. Measured from full load to zero load.
3. Output ripple and noise measured with 10µF tantalum and 1µF ceramic capacitor across output. (48V: 1µF ceramic cap. only).
4. An external input capacitor 47µF for all models are recommended to reduce input ripple voltage.
5. Require a 47µF aluminum capacitor connected between +Vout and –Vout for 48Vout models.
6. For information about EN50155 and RIA12, refer to application note.

# CHB100W SERIES
## 66 -100 WATT, 4:1 INPUT RANGE

### Features

- 66W-100W Isolated Output
- Efficiency to 89%
- 250KHz Switching Frequency
- 4 : 1 Input Range
- Regulated Outputs
- Continuous Short Circuit Protection
- Five-Sided Metal Case
- Half-Brick Size Meet Industrial Standard
- UL60950-1 Approval (Except 28 Vout)

E176177

### Mechanical Dimensions

All Dimensions in Inches (mm)
Tolerance Inches: X.XX=±0.02 , X.XXX=±0.010
Millimeters: X.X=±0.5 , X.XX=±0.25

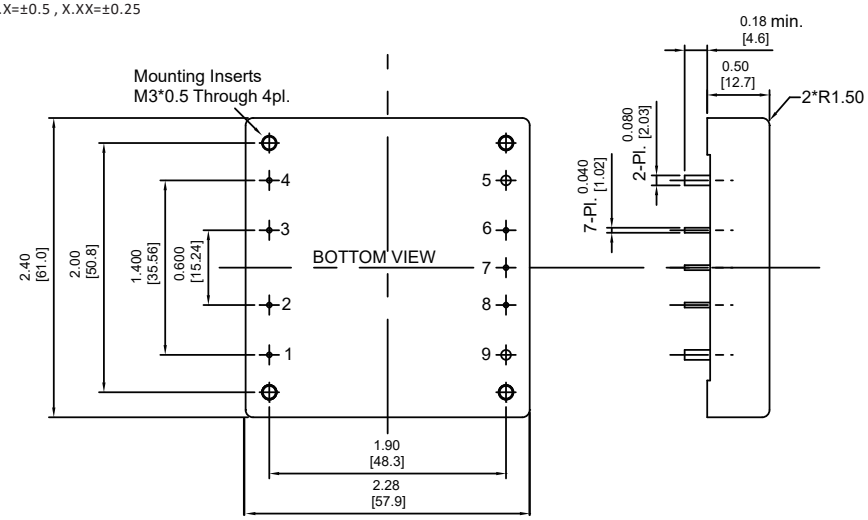


| PIN CONNECTION | |
|---|---|
| PIN | Function |
| 1 | +V Input |
| 2 | On/Off |
| 3 | Case |
| 4 | -V Input |
| 5 | -V Output |
| 6 | -Sense |
| 7 | Trim |
| 8 | +Sense |
| 9 | +V Output |

| MODEL NUMBER | INPUT VOLTAGE | OUTPUT VOLTAGE | OUTPUT CURRENT | | INPUT CURRENT | | % EFF. | CAPACITOR LOAD MAX. |
|---|---|---|---|---|---|---|---|---|
| | | | MIN. | MAX. | NO LOAD | FULL LOAD | | |
| CHB100W-24S3V3 | 9-36 VDC | 3.3 VDC | 0 mA | 20 A | 35 mA | 3333 mA | 82.5 | 20000µF |
| CHB100W-24S05 | 9-36 VDC | 5 VDC | 0 mA | 20 A | 35 mA | 4931 mA | 84.5 | 20000µF |
| CHB100W-24S12 | 9-36 VDC | 12 VDC | 0 mA | 8.3 A | 35 mA | 4854 mA | 85.5 | 8300µF |
| CHB100W-24S15 | 9-36 VDC | 15 VDC | 0 mA | 6.7 A | 35 mA | 4813 mA | 87 | 6700µF |
| CHB100W-24S24 | 9-36 VDC | 24 VDC | 0 mA | 4.17 A | 35 mA | 4766 mA | 87.5 | 1800µF |
| CHB100W-24S28 | 9-36 VDC | 28 VDC | 0 mA | 3.57 A | 50 mA | 4845 mA | 86 | 2200µF |
| CHB100W-24S48 | 9-36 VDC | 48 VDC | 0 mA | 2.08 A | 35 mA | 5042 mA | 82.5 | 470µF |
| CHB100W-48S3V3 | 18-75 VDC | 3.3 VDC | 0 mA | 20 A | 30 mA | 1667 mA | 82.5 | 20000µF |
| CHB100W-48S05 | 18-75 VDC | 5 VDC | 0 mA | 20 A | 30 mA | 2422 mA | 86 | 20000µF |
| CHB100W-48S12 | 18-75 VDC | 12 VDC | 0 mA | 8.3 A | 30 mA | 2371 mA | 87.5 | 8300µF |
| CHB100W-48S15 | 18-75 VDC | 15 VDC | 0 mA | 6.7 A | 30 mA | 2379 mA | 88 | 6700µF |
| CHB100W-48S24 | 18-75 VDC | 24 VDC | 0 mA | 4.17 A | 30 mA | 2343 mA | 89 | 2200µF |
| CHB100W-48S28 | 18-75 VDC | 28 VDC | 0 mA | 3.57 A | 50 mA | 2422 mA | 86 | 2200µF |
| CHB100W-48S48 | 18-75 VDC | 48 VDC | 0 mA | 2.08 A | 30 mA | 2462 mA | 84.5 | 470µF |

## Remote On/Off Control

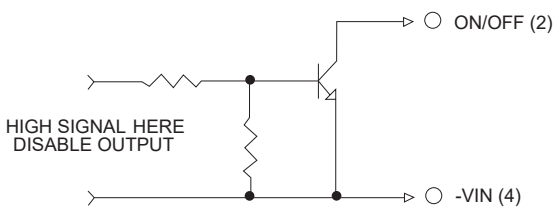


## External Output Trim

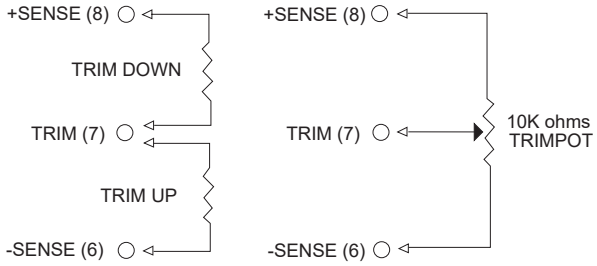


## Specifications

All Specifications Typical At Nominal Line, Full Load, and 25˚C Unless Otherwise Noted

### INPUT SPECIFICATIONS

| | | |
|---|---|---|
| Input Voltage Range | | 24V ..... 9-36V |
| | | 48V ..... 18-75V |
| Input Surge Voltage (100ms max.) | | 24V ..... 50Vdc max. |
| | | 48V ..... 100Vdc max. |
| Under Voltage Lockout | 24Vin | power up ..... 8.8V |
| | | power down ..... 8.0V |
| | 48Vin | power up ..... 17V |
| | | power down ..... 16V |
| Positive Logic Remote On/Off | | See note 4 & 5 |
| Input Filter | | Pi Type |

### OUTPUT SPECIFICATIONS

| | |
|---|---|
| Voltage Accuracy | 1.0% max. |
| 3.3V & 48V (note 7) | 1.5% max. |
| Transient Response: 25% Step Load Change | < 500µs |
| External Trim Adj. Range | ±10% |
| Ripple & Noise, 20MHz BW (note3 ) | |
| 3.3V & 5V | 40mV RMS max., 100mV pk-pk max. |
| 12V & 15V | 60mV RMS max., 150mV pk-pk max. |
| 24V | 100mV RMS max., 240mV pk-pk max. |
| 28V | 100mV RMS max., 280mV pk-pk max. |
| 48V | 200mV RMS max., 480mV pk-pk max. |
| Temperature Coefficient | ±0.03%/°C |
| Short Circuit Protection | Continuous |
| Line Regulation (note 1) | ±0.2% max. |
| Load Regulation (note 2) | ±0.2% max. |
| Over Voltage Protection Trip Range ,% Vo nom. | 115-140% |
| Current Limit | 110% -140% Nominal Output |
| Start up time | 25ms typ. |

### GENERAL SPECIFICATIONS

| | |
|---|---|
| Efficiency | See Table |
| Isolation Voltage | Input/Output, Input/Case, Output/Case ..... 1500VDC min. |
| Isolation Resistance | $10^7$ ohm min. |
| Isolation Capacitance | 1500pF typ. |
| Switching Frequency | 250KHz typ. |
| Operating Case Temperature | -40˚C to 100˚C |
| Storage Temperature | -55˚C to +105˚C |
| Thermal Shutdown Case Temp. | 105˚C typ. |
| Humidity | 95% RH max. Non condensing |
| MTBF ....MIL-HDBK-217F, GB, 25˚C, Full Load | 700Khrs typ. |
| Dimensions | 2.28 x 2.40 x 0.50 inches (57.9 x 61.0 x 12.7 mm) |
| Case Material | Aluminum |
| Weight | 95 g |

### NOTE

1. Measured from high line to low line.
2. Measured from full load to zero load.
3. Output ripple and noise measured with 10µF tantalum and 1µF ceramic capacitor across output. (48V: 0.1µF ceramic cap. only)
4. Logic Compatibility ..... open collector ref to -input
   - Module On ..... >3.5VDC or open circuit
   - Module Off ..... 0 to<1.8VDC
5. Suffix "N" to the model number with negative logic remote On/Off
   - Module On ..... 0 to<1.8VDC
   - Module Off ..... >3.5VDC or open circuit
6. Suffix "-C" to the model number with clear mounting insert. (3.2mm DIA.)
7. Require a 47µF aluminum capacitor connected between +Vout and –Vout for 48Vout models.

# CHE100/CHE100W SERIES
## 100 WATT, 4:1 INPUT RANGE

### Features

- 100W Isolated Output
- Half-Brick Size, Six-Sided Shield Metal Case
- High Efficiency to 93%
- 4 : 1 Input Range
- Regulated Outputs
- 250KHz Switching Frequency
- Continuous Short Circuit Protection
- Input Under-Voltage Protection
- Over Temperature/Voltage/Current Protection
- Remote On/Off
- Full Load Operation up to 60˚C
  with Heat-Sink M-C091 Natural Convention
- No Tantalum Capacitor Inside
- Safety Meets UL60950-1, EN60950-1, and IEC60950-1

CE

### Mechanical Dimensions

All Dimensions in Inches (mm)
Tolerance Inches: X.XX=±0.02 , X.XXX=±0.010
Millimeters: X.X=±0.5 , X.XX=±0.25

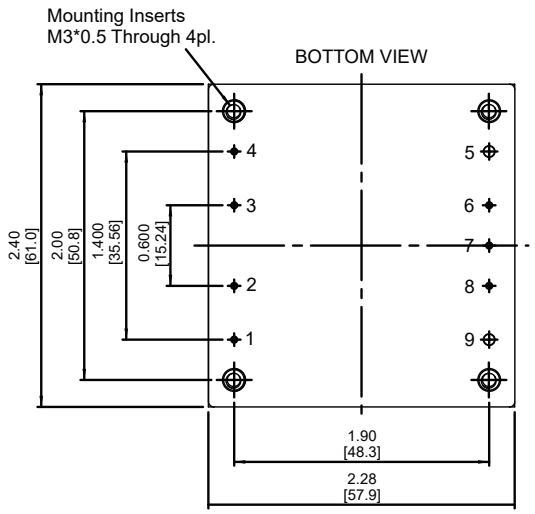


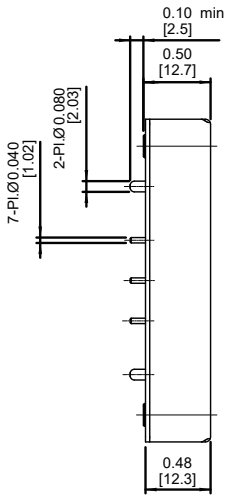


| PIN CONNECTION | |
|---|---|
| PIN | Function |
| 1 | +V Input |
| 2 | On/Off |
| 3 | Case |
| 4 | -V Input |
| 5 | -V Output |
| 6 | -Sense |
| 7 | Trim |
| 8 | +Sense |
| 9 | +V Output |

### CHE100W Series

| MODEL NUMBER | INPUT VOLTAGE | OUTPUT VOLTAGE | OUTPUT CURRENT MIN. | OUTPUT CURRENT MAX. | INPUT CURRENT NO LOAD | INPUT CURRENT FULL LOAD | % EFF. (4) | % EFF. (3) | CAPACITOR LOAD MAX. |
|---|---|---|---|---|---|---|---|---|---|
| CHE100W-24S3V3 | 9-36 VDC | 3.3 VDC | 0 mA | 25 A | 200 mA | 3.94 A | 85.5 | 87 | 25000µF |
| CHE100W-24S05 | 9-36 VDC | 5 VDC | 0 mA | 20 A | 150 mA | 4.66 A | 88.5 | 89.5 | 20000µF |
| CHE100W-24S12 | 9-36 VDC | 12 VDC | 0 mA | 8.4 A | 200 mA | 4.62 A | 90 | 90.5 | 8400µF |
| CHE100W-24S15 | 9-36 VDC | 15 VDC | 0 mA | 6.7 A | 200 mA | 4.62 A | 89.5 | 90.5 | 6700µF |
| CHE100W-24S24 | 9-36 VDC | 24 VDC | 0 mA | 4.2 A | 100 mA | 4.76 A | 88.5 | 89 | 4200µF(2) |
| CHE100W-24S48 | 9-36 VDC | 48 VDC | 0 mA | 2.1 A | 100 mA | 4.76 A | 89.5 | 88.5 | 2100µF(2) |
| CHE100W-48S3V3 | 18-75 VDC | 3.3 VDC | 0 mA | 25 A | 130 mA | 1.96 A | 87.5 | 88 | 25000µF |
| CHE100W-48S05 | 18-75 VDC | 5 VDC | 0 mA | 20 A | 130 mA | 2.28 A | 91.5 | 92 | 20000µF |
| CHE100W-48S12 | 18-75 VDC | 12 VDC | 0 mA | 8.4 A | 100 mA | 2.26 A | 92.5 | 93 | 8400µF |
| CHE100W-48S15 | 18-75 VDC | 15 VDC | 0 mA | 6.7 A | 100 mA | 2.26 A | 91.5 | 92.5 | 6700µF |
| CHE100W-48S24 | 18-75 VDC | 24 VDC | 0 mA | 4.2 A | 100 mA | 2.32 A | 91 | 91 | 4200µF(2) |
| CHE100W-48S48 | 18-75 VDC | 48 VDC | 0 mA | 2.1 A | 100 mA | 2.32 A | 91.5 | 90.5 | 2100µF(2) |

NOTE:
1. Nominal Input Voltage 24, 48 VDC
2. Require a 10uF Aluminum Capacitor Connected Between +Vout and –Vout for 24 & 48Vout Models.
3. Measured at Nominal Input Voltage.
4. Measured at 12VDC for 24SXX, 24VDC for 48SXX.

## Remote On/Off Control

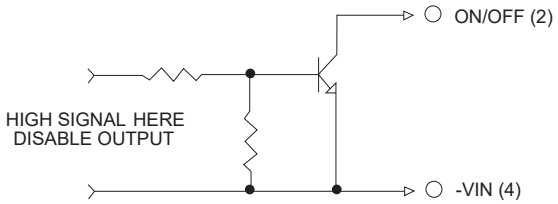


## External Output Trim

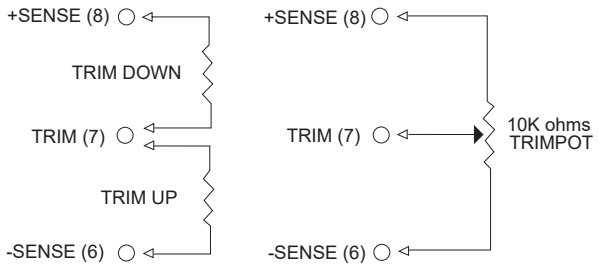


## Derating Curve

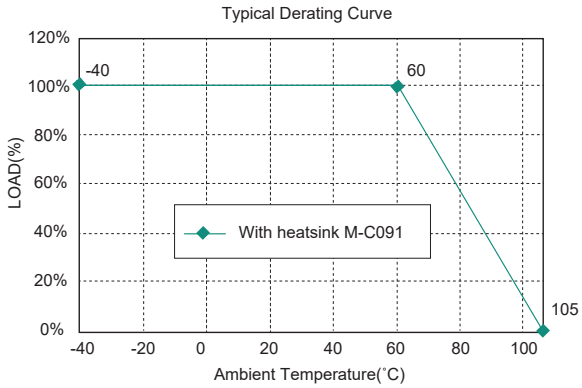


## Specifications

All Specifications Typical At Nominal Line, Fill Load, and 25˚C Unless Otherwise Noted

### INPUT SPECIFICATIONS

| | |
|---|---|
| IInput Voltage Range . | 24V ..... 9-36V |
| | 48V ..... 18-75V |
| Input Surge Voltage (100ms max.) | 24V ..... 50Vdc max. |
| | 48V.....100Vdc max. |
| Under voltage lockout 24Vin | power up .....8.8V |
| | power down .....8.0V |
| 48Vin | power up ..... 17V |
| | power down ..... 16V |
| Positive Logic Remote On/Off | see note 4 & 5 |
| Input Filter | PI Type |

### OUTPUT SPECIFICATIONS

| | |
|---|---|
| Voltage Accuracy | ±1.0% max. |
| Transient Response: 25% Step Load Change | < 500µs |
| External Trim Adj. Range | ±10% |
| Ripple & Noise, 20MHz BW | |
| 3.3V & 5V | 40mV RMS, 100mV pk-pk max. |
| 12V & 15V | 60mV RMS, 120mV pk-pk max. |
| 24V | 100mV RMS, 240mV pk-pk max. |
| 48V | 200mV RMS, 480mV pk-pk max. |
| Temperature Coefficient | ±0.03%/˚C |
| Short Circuit Protection | Continuous |
| Line Regulation(note 1) | ±0.2% max. |
| Load Regulation(note 2) | ±0.2% max. |
| Over Voltage Protection trip Range ,% Vo nom. | 115-140% |
| Current Limit | 110% -140% Nominal Output |
| Start up time | 10ms typ. |

### GENERAL SPECIFICATIONS

| | |
|---|---|
| Efficiency | See Table |
| Isolation Voltage | Input/Output .....1500VDC min. |
| | Input/Case .....1500VDC min. |
| | Output/Case ..... 1500VDC min. |
| Isolation Resistance | $10^7$ ohm min. |
| Isolation Capacitance | 1000pF typ. |
| Switching Frequency | 250KHz typ. |
| Operating Case Temperature | -40˚C to 105˚C. |
| Storage Temperature | -55˚C to +105˚C |
| Thermal Shutdown, Case Temperature | 110˚C typ. |
| Humidity | 95% RH max. Non condensing |
| MTBF ..... MIL-STD-217F, GB, 25˚C, Full Load | XXS05: 750Khrs typ. |
| | Others: 880Khrs typ. |
| Dimensions | 2.28 x 2.40 x 0.50 inches |
| | (57.9 x 61.0 x 12.7 mm) |
| Case Material | Aluminum with Non-Conducted Base |
| Weight | 95 g |

### NOTE

1. Measured from high line to low line.
2. Measured from full load to zero load.
3. Output ripple and noise measured with 10µF tantalum and 1µF ceramic capacitor across output.
   (24V & 48V:10µF aluminum and 1µF ceramic capacitor across output.)
4. Logic compatibility ..... open collector refer to -Vin
   Module On ..... >3.5VDC to 75VDC or open circuit
   Module Off ..... 0 to < 1.2VDC
5. Suffix "N" to the model number with negative logic remote on/off
   Module On ..... 0 to < 1.2VDC
   Module Off ..... >3.5VDC to 75VDC or open circuit

# CHB150 SERIES
## 99-150 WATT

## Features

- 99W-150W Isolated Output
- Efficiency to 89%
- 500KHz Switching Frequency
- 2 : 1 Input Range
- Regulated Outputs
- Continuous Short Circuit Protection
- Five-Sided Metal Case
- Half-Brick Size Meet Industrial Standard
- CE Mark Meets 2004/108/EC
- UL60950-1 Approval
- Without Tantalum Capacitor Inside (V2.X Only, with TC Label)

E176177

## Mechanical Dimensions

All Dimensions in Inches (mm)
Tolerance Inches: X.XX=±0.02 , X.XXX=±0.010
Millimeters: X.X=±0.5 , X.XX=±0.25

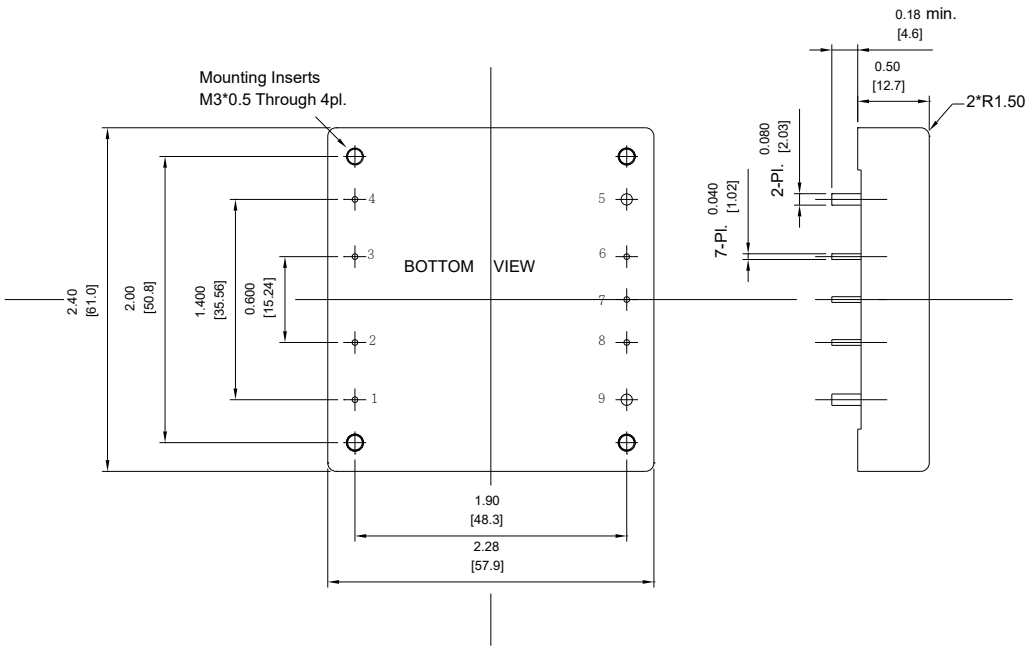


| PIN CONNECTION | |
|---|---|
| PIN | Function |
| 1 | +V Input |
| 2 | On/Off |
| 3 | Case |
| 4 | -V Input |
| 5 | -V Output |
| 6 | -Sense |
| 7 | Trim |
| 8 | +Sense |
| 9 | +V Output |

| MODEL NUMBER | INPUT VOLTAGE | OUTPUT VOLTAGE | OUTPUT CURRENT MIN. | OUTPUT CURRENT MAX. | INPUT CURRENT NO LOAD | INPUT CURRENT FULL LOAD | % EFF. | CAPACITOR LOAD MAX. |
|---|---|---|---|---|---|---|---|---|
| CHB150-48S33 | 36-75 VDC | 3.3 VDC | 0 mA | 30 A | 25 mA | 2.5 A | 82 | 30000μF |
| CHB150-48S05 | 36-75 VDC | 5 VDC | 0 mA | 30 A | 25 mA | 3.6 A | 86 | 30000μF |
| CHB150-48S12 | 36-75 VDC | 12 VDC | 0 mA | 12.5 A | 25 mA | 3.5 A | 89 | 12500μF |
| CHB150-48S15 | 36-75 VDC | 15 VDC | 0 mA | 10 A | 25 mA | 3.5 A | 89 | 10000μF |
| CHB150-48S24 | 36-75 VDC | 24 VDC | 0 mA | 6.25 A | 25 mA | 3.5 A | 89 | 6250μF |

NOTE: 1. Nominal Input Voltage 48VDC

## Remote On/Off Control

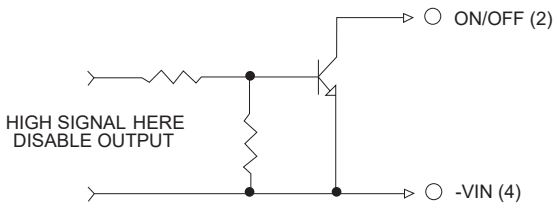


## External Output Trim

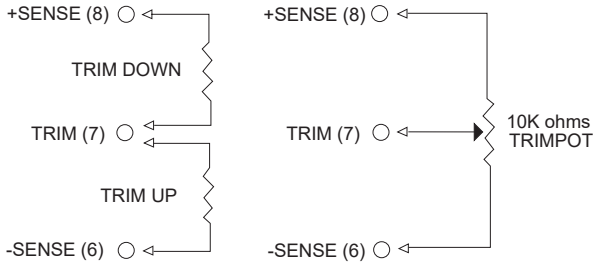


## Specifications

All Specifications Typical At Nominal Line, Full Load, and 25˚C Unless Otherwise Noted

### INPUT SPECIFICATIONS

| | | |
|---|---|---|
| Input Voltage Range | | 48V..... 36-75V |
| Input Surge Voltage (100ms max.) | | 48V ..... 100Vdc max. |
| Under Voltage Lockout | 48Vin | power up ..... 34V |
| | 48Vin | power down.....32.5V |
| Positive Logic Remote On/Off | | See note 3 & 4 |
| Input Filter | | Pi Type |

### OUTPUT SPECIFICATIONS

| | |
|---|---|
| Voltage Accuracy | ±1.0% max. |
| Transient Response: 25% Step Load Change | < 500µs |
| External Trim Adj. Range | ±10% |
| Ripple & Noise, 20MHz BW (note 5) | |
| 3.3V & 5V | 40mV RMS max. |
| | 100mV pk-pk max. |
| 12V & 15V | 60mV RMS max. |
| | 150mV pk-pk max. |
| 24V | 100mV RMS max. |
| | 240mV pk-pk max. |
| Temperature Coefficient | ±0.03%/°C |
| Short Circuit Protection | Continuous |
| Line Regulation (note 1) | ±0.2% max. |
| Load Regulation (note 2) | ±0.2% max. |
| Over Voltage Protection Trip Range, % Vo nom. | 115-140% |
| Current Limit | 110%-140% Nominal Output |
| Start up time | 5ms typ. |

### GENERAL SPECIFICATIONS

| | |
|---|---|
| Efficiency | See Table |
| Isolation Voltage | Input/Output ..... 1500VDC min. |
| | Input/Case ..... 1500VDC min. |
| | Output/Case ..... 1500VDC min. |
| Isolation Resistance | $10^7$ ohm min. |
| Isolation Capacitance | 1000pF typ. |
| Switching Frequency | 500KHz typ. |
| Operating Case Temperature | -40˚C to 100˚C |
| Storage Temperature | -40˚C to +105˚C |
| Humidity | 95% RH max. Non condensing |
| MTBF ..... MIL-STD-217F, GB, 25˚C, Full Load | 900Khrs typ. |
| Thermal Shutdown Case Temp. | 100˚C typ. |
| Dimensions | 2.28 x 2.40 x 0.50 inches |
| | (57.9 x 61.0 x 12.7 mm) |
| Case Material | Aluminum |
| Weight | 100 g |

### NOTE

1. Measured from high line to low line.
2. Measured from full load to zero load.
3. Logic compatibility ..... open collector ref to -Input
   Module On ..... open circuit
   Module Off ..... < 0.8VDC
4. Suffix "N" to the model number with negative logic remote On/Off.
5. Output ripple and noise measured with 10µF tantalum and 1µF ceramic capacitor across output.
6. Suffix "-C" to the model number with clear mounting insert. (3.2mm DIA.)

# CHB150W SERIES
## 99-150 WATT, 4:1 INPUT RANGE

### Features

- 99W-150W Isolated Output
- Efficiency to 91%
- 250KHz Switching Frequency
- 4 : 1 Input Range
- Regulated Outputs
- Remote On/Off
- Over Temperature Protection
- Over Voltage/Current Protection
- Continuous Short Circuit Protection
- Half-Brick Size Meet Industrial Standard
- CE Mark Meets 2004/108/EC
- UL60950-1 Approval (Except 28&48 Vout)

E176177

### Mechanical Dimensions

All Dimensions in Inches (mm)
Tolerance Inches: X.XX=±0.02 , X.XXX=±0.010
Millimeters: X.X=±0.5 , X.XX=±0.25

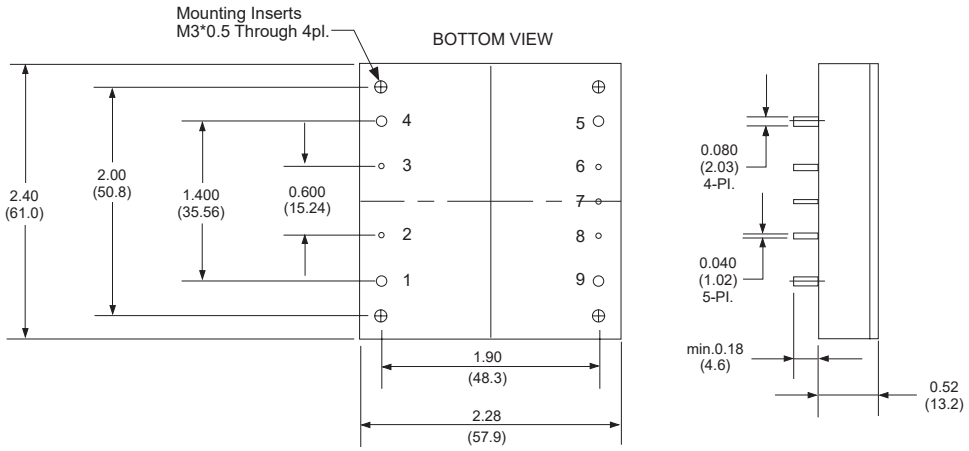


| PIN CONNECTION | |
|---|---|
| PIN | Function |
| 1 | +V Input |
| 2 | On/Off |
| 3 | Case |
| 4 | -V Input |
| 5 | -V Output |
| 6 | -Sense |
| 7 | Trim |
| 8 | +Sense |
| 9 | +V Output |

| MODEL NUMBER | INPUT VOLTAGE | OUTPUT VOLTAGE | OUTPUT CURRENT | | INPUT CURRENT | | % EFF. | CAPACITOR LOAD MAX. |
|---|---|---|---|---|---|---|---|---|
| | | | MIN. | MAX. | NO LOAD | FULL LOAD | | |
| CHB150W-24S3V3 | 9-36 VDC | 3.3 VDC | 0 mA | 30 A | 200 mA | 4741 mA | 87 | 30000µF |
| CHB150W-24S05 | 9-36 VDC | 5 VDC | 0 mA | 30 A | 200 mA | 7184 mA | 87 | 30000µF |
| CHB150W-24S12 | 9-36 VDC | 12 VDC | 0 mA | 12.5 A | 100 mA | 7102 mA | 88 | 12500µF |
| CHB150W-24S15 | 9-36 VDC | 15 VDC | 0 mA | 10 A | 100 mA | 7184 mA | 87 | 10000µF |
| CHB150W-24S24 | 9-36 VDC | 24 VDC | 0 mA | 6.5 A | 100 mA | 7386 mA | 88 | 1800µF |
| CHB150W-24S28 | 9-36 VDC | 28 VDC | 0 mA | 5.4 A | 100 mA | 7325 mA | 86 | 1800µF |
| CHB150W-24S48 | 9-36 VDC | 48 VDC | 0 mA | 3.12 A | 200 mA | 7428 mA | 84 | 1000µF |
| CHB150W-48S3V3 | 18-75 VDC | 3.3 VDC | 0 mA | 30 A | 100 mA | 2344 mA | 88 | 30000µF |
| CHB150W-48S05 | 18-75 VDC | 5 VDC | 0 mA | 30 A | 100 mA | 3472 mA | 90 | 30000µF |
| CHB150W-48S12 | 18-75 VDC | 12 VDC | 0 mA | 12.5 A | 50 mA | 3434 mA | 91 | 12500µF |
| CHB150W-48S15 | 18-75 VDC | 15 VDC | 0 mA | 10 A | 50 mA | 3472 mA | 90 | 10000µF |
| CHB150W-48S24 | 18-75 VDC | 24 VDC | 0 mA | 6.5 A | 50 mA | 3611 mA | 90 | 2200µF |
| CHB150W-48S28 | 18-75 VDC | 28 VDC | 0 mA | 5.4 A | 50 mA | 3580 mA | 88 | 2200µF |
| CHB150W-48S48 | 18-75 VDC | 48 VDC | 0 mA | 3.12 A | 100 mA | 3633 mA | 86 | 1000µF |

## Remote On/Off Control

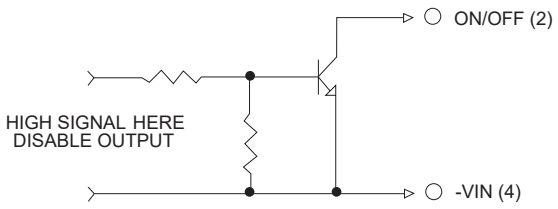


## External Output Trim

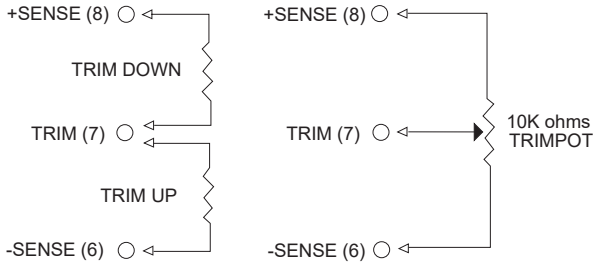


## Specifications

All Specifications Typical At Nominal Line, Full Load, and 25˚C Unless Otherwise Noted

### INPUT SPECIFICATIONS

| | | |
|---|---|---|
| Input Voltage Range | | 24V ..... 9-36V |
| | | 48V ..... 18-75V |
| Input Surge Voltage (100ms max.) | | 24V ..... 50Vdc max. |
| | | 48V ..... 100Vdc max. |
| Under Voltage Lockout | 24Vin | power up ..... 8.8V |
| | | power down ..... 8.0V |
| | 48Vin | power up ..... 17V |
| | | power down ..... 16V |
| Positive Logic Remote On/Off | | See note 4 & 5 |
| Input Filter | | Pi Type |

### OUTPUT SPECIFICATIONS

| | |
|---|---|
| Voltage Accuracy | ±1.0% max. |
| 3.3V & 48V (note 7) | ±1.5% max. |
| Transient Response: 25% Step Load | < 500µs |
| Change External Trim Adj. Range | ±10% |
| Ripple & Noise, 20MHz BW (note 3) | |
| 3.3V & 5V | 40mV RMS max., 100mV pk-pk max. |
| 12V & 15V | 60mV RMS max., 150mV pk-pk max. |
| 24V | 100mV RMS max., 240mV pk-pk max. |
| 28V | 100mV RMS max., 280mV pk-pk max. |
| 48V | 200mV RMS max., 480mV pk-pk max. |
| Temperature Coefficient | ±0.03%/°C |
| Short Circuit Protection | Continuous |
| Line Regulation (note 1) | ±0.2% max. |
| Load Regulation (note 2) | ±0.2% max. |
| Over Voltage Protection Trip Range, % Vo nom. | 115-140% |
| Current Limit | 110%-140% Nominal Output |
| Start up time | 25ms typ. |

### GENERAL SPECIFICATIONS

| | |
|---|---|
| Efficiency | See Table |
| Isolation Voltage | Input/Output, Input/Case, Output/Case ..... 1500VDC min. |
| Isolation Resistance | $10^7$ ohm min. |
| Isolation Capacitance | 1000pF typ. |
| Switching Frequency | 250KHz typ. |
| Operating Case Temperature | -40˚C to 100˚C |
| Storage Temperature | -55˚C to +105˚C |
| Thermal Shutdown Case Temp. | 110˚C typ. |
| Humidity | 95% RH max. Non condensing |
| MTBF ... MIL-HDBK-217F, GB, 25˚C, Full Load | 400Khrs typ. |
| Dimensions | 2.28 x 2.40 x 0.52 inches (57.9 x 61.0 x 13.2 mm) |
| Case Material | Aluminum Baseplate with Plastic Case |
| Weight | 112 g |

### NOTE

1. Measured from high line to low line.
2. Measured from full load to zero load.
3. Output ripple and noise measured with 10µF tantalum and 1µF ceramic capacitor across output.
4. Logic compatibility ..... open collector ref to -input
   Module On ..... > 3.5VDC or open circuit
   Module Off ..... 0 to<1.8VDC
5. Suffix "N" to the model number with negative logic remote On/Off
   Module On ..... 0 to<1.8VDC
   Module Off ..... > 3.5VDC or open circuit
6. Suffix "-C" to the model number with clear mounting insert. (3.2mm DIA.)
7. Require a 47µF aluminum capacitor connected between +vout and –vout for 48Vout models.

# CHB150-110S SERIES
## 150 WATT, INPUT RANGE 66-160 VDC

### Features

- 150W Isolated Output
- Efficiency to 92.5%
- 200KHz Switching Frequency
- 3 : 1 Input Range
- Regulated Outputs
- Remote On/Off
- Over Temperature Protection
- Over Voltage/Current Protection
- Continuous Short Circuit Protection
- Half-Brick Size Meets Industrial Standard
- UL60950-1 Approval
- Meets EN50155

### Mechanical Dimensions

All Dimensions in Inches (mm)
Tolerance Inches: X.XX=±0.02 , X.XXX=±0.010
Millimeters: X.X=±0.5 , X.XX=±0.25

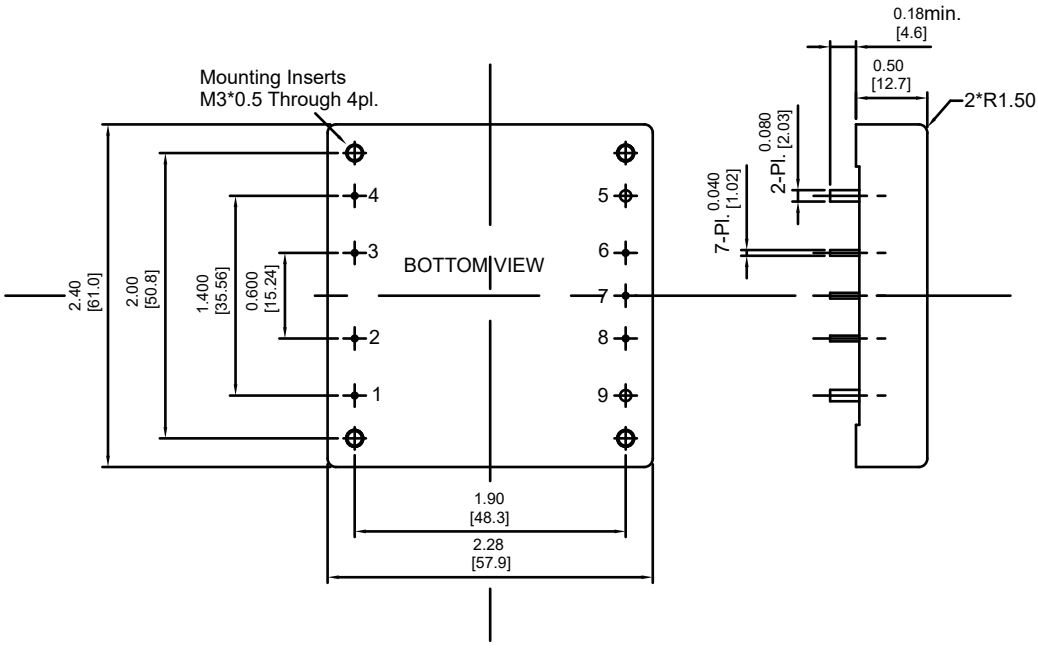


| PIN CONNECTION | |
|---|---|
| PIN | Function |
| 1 | +V Input |
| 2 | On/Off |
| 3 | Case |
| 4 | -V Input |
| 5 | -V Output |
| 6 | -Sense |
| 7 | Trim |
| 8 | +Sense |
| 9 | +V Output |

| MODEL NUMBER | INPUT VOLTAGE | OUTPUT VOLTAGE | OUTPUT CURRENT MIN. | OUTPUT CURRENT MAX. | INPUT CURRENT NO LOAD | INPUT CURRENT FULL LOAD | % EFF. | CAPACITOR LOAD MAX. |
|---|---|---|---|---|---|---|---|---|
| CHB150-110S05 | 66-160 VDC | 5 VDC | 0 mA | 30 A | 40 mA | 1474 mA | 92.5 | 10000μF |
| CHB150-110S12 | 66-160 VDC | 12 VDC | 0 mA | 12.5 A | 40 mA | 1474 mA | 92.5 | 5600μF |
| CHB150-110S24 | 66-160 VDC | 24 VDC | 0 mA | 6.5 A | 60 mA | 1541 mA | 92 | 2200μF |

NOTE: 1. Nominal Input Voltage 110VDC

## Remote On/Off Control

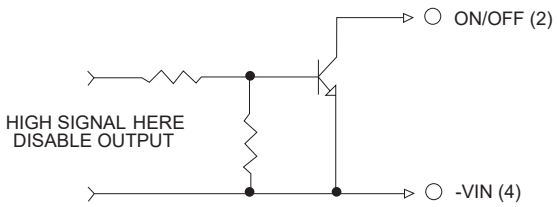


## External Output Trim

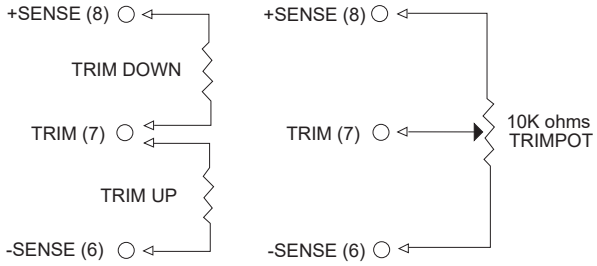


## Specifications

All Specifications Typical At Nominal Line, Full Load, and 25˚C Unless Otherwise Noted

### INPUT SPECIFICATIONS

| | |
|---|---|
| Input Voltage Range | 110V, 66-160V |
| Input Surge Voltage (100ms max.) | 180Vdc max. |
| Under Voltage Lockout | power up: 62V<br>power down: 56V |
| Positive Logic Remote On/Off: | |
| Logic Compatibility | Open Collector ref to -Input |
| Module On | > 3.5Vdc to 75Vdc or Open Circuit |
| Module Off | 0 to< 1.8Vdc |
| Input Filter | Pi Type |

### OUTPUT SPECIFICATIONS

| | |
|---|---|
| Voltage Accuracy | ±1.0% max. |
| Transient Response: | |
| 25% Step Load Change | |
| Error Band | ±5% Vout |
| Recover Time | < 200µs |
| External Trim Adj. Range | ±10% |
| Ripple & Noise, 20MHz BW (note 3) | |
| 5V | 40mV RMS, 100mV pk-pk max. |
| 12V | 60mV RMS, 150mV pk-pk max. |
| 24V | 100mV RMS, 240mV pk-pk max. |
| Temperature Coefficient | ±0.03%/°C |
| Short Circuit Protection | Continuous |
| Line Regulation (note 1) | ±0.2% max. |
| Load Regulation (note 2) | ±0.2% max. |
| Over Voltage Protection Trip Range, % Vo nom. | 115-140% |
| Current Limit | 110%-180% Nominal Output |
| Start up time | 45ms typ. |

### GENERAL SPECIFICATIONS

| | |
|---|---|
| Efficiency | See Table |
| Isolation Voltage | Input/Output,<br>Input/Case 2250VDC min.<br>Output/Case 1500VDC min. |
| Isolation Resistance | $10^7$ ohm min. |
| Isolation Capacitance | 1000pF typ. |
| Switching Frequency | 200KHz typ. |
| Operating Case Temperature | -40˚C to 100˚C |
| Storage Temperature | -55˚C to +105˚C |
| Thermal Shutdown Case Temp. | 105˚C typ. |
| Humidity | 95% RH max. Non condensing |
| MTBF.....MIL-HDBK-217F, GB, 25˚C, Full Load | XXS05: 240Khrs typ.<br>Others: 320Khrs typ. |
| Safety | UL60950-1 2nd (Basic Insulation) |
| EMC (note 7) | EN50155 (EN50121-3-2)<br>with External Filter |
| Shock/Vibration | EN50155 (EN61373) |
| Environmental | EN50155 (EN60068-2-1) |
| Dimensions | 2.28 x 2.40 x 0.50 inches<br>(57.9 x 61.0 x 12.7 mm) |
| Case Material | Aluminum Baseplate with Plastic Case |
| Weight | 90 g |

### NOTE

1. Measured from high line to low line.
2. Measured from full load to zero load.
3. Output Ripple and Noise measured with 10µF tantalum and 1µF ceramic apacitor across output.
4. Suffix "N" to the model number with negative logic remote On/Off
   Module On 0 to<1.8VDC
   Module Off > 3.5VDC to 75VDC or open circuit
5. Suffix "-C" to the model number with clear mounting insert (3.2mm DIA.)
6. An external input capacitor 220µF for all models are recommended to reduce input ripple voltage.
7. Design meet EN50155 and RIA12 refer to application note.

# CHB150W8 SERIES
## 150 WATT, INPUT RANGE 9-75 VDC

## Features

- 150W Isolated Output
- Efficiency to 90%
- Fixed Switching Frequency
- Input Under Voltage Protection
- Over Temperature Protection
- Over Voltage/Current Protection
- Remote On/Off
- Industry Standard Half-Brick Package
- Fully Isolated 1500VDC
- UL60950-1 2nd Approval

**PRELIMINARY**

E176177

## Mechanical Dimensions

All Dimensions in Inches (mm)
Tolerance Inches: X.XX=±0.02 , X.XXX=±0.010
Millimeters: X.X=±0.5 , X.XX=±0.25

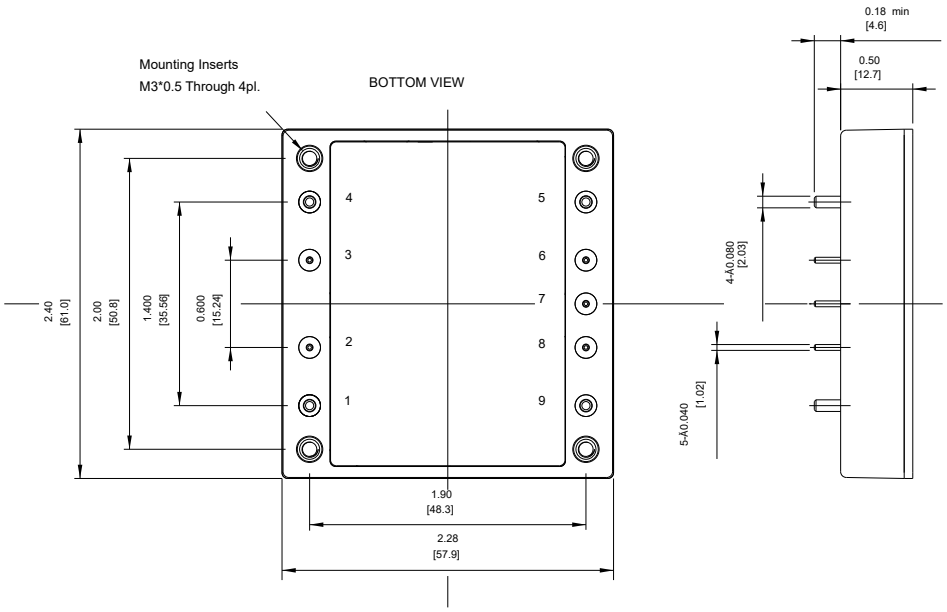


| PIN CONNECTION | |
|---|---|
| PIN | Function |
| 1 | +V Input |
| 2 | On/Off |
| 3 | Case |
| 4 | -V Input |
| 5 | -V Output |
| 6 | -Sense |
| 7 | Trim |
| 8 | +Sense |
| 9 | +V Output |

| MODEL NUMBER | INPUT VOLTAGE | OUTPUT VOLTAGE | OUTPUT CURRENT MIN. | OUTPUT CURRENT MAX. | INPUT CURRENT NO LOAD | INPUT CURRENT FULL LOAD | % EFF. (2) | % EFF. (1) | % EFF. (3) | CAPACITOR LOAD MAX. |
|---|---|---|---|---|---|---|---|---|---|---|
| CHB150W8-36S12 | 9-75 VDC | 12 VDC | 0 mA | 12.5 A | 60 mA | 4.66 A | 89.5 | 89.5 | 89.5 | 5000µF |
| CHB150W8-36S15 | 9-75 VDC | 15 VDC | 0 mA | 10 A | 60 mA | 4.63 A | 90 | 90 | 90 | 5000µF |
| CHB150W8-36S24 | 9-75 VDC | 24 VDC | 0 mA | 6.25 A | 60 mA | 4.66 A | 89.5 | 89.5 | 89 | 2000µF(4) |
| CHB150W8-36S28 | 9-75 VDC | 28 VDC | 0 mA | 5.35 A | 60 mA | 4.63 A | 90 | 90 | 89.5 | 1500µF(4) |
| CHB150W8-36S48 | 9-75 VDC | 48 VDC | 0 mA | 3.13 A | 60 mA | 4.63 A | 90.5 | 90 | 89.5 | 1000µF(4) |

NOTE:
1. Nominal Input Voltage 36 VDC
2. Measured at 24Vin
3. Measured at 48Vin
4. The output terminal of 24, 28, 48Vout models required a minimum capacitor 100uF to maintain specified regulation.

## Remote On/Off Control

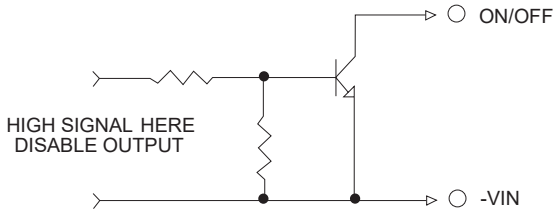


## External Output Trim

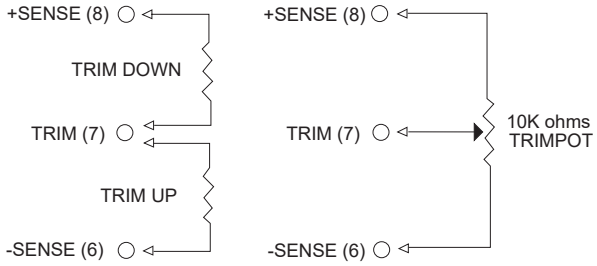


## Specifications

All Specifications Typical At Nominal Line, Full Load, and 25˚C Unless Otherwise Noted

### INPUT SPECIFICATIONS

| | |
|---|---|
| Operating Input Voltage Range | 36V ..... 9-75V |
| Input Surge Voltage (100ms max.) | 100Vdc max |
| Under Voltage Lockout | power up ..... 9.5V |
| | power down ..... 8.0V |
| Positive Logic Remote On/Off | See note 4 & 5 |
| Input Filter | LC Type |

### OUTPUT SPECIFICATIONS

| | |
|---|---|
| Voltage Accuracy | ±1.0% max. |
| Transient Response:25% Step Load Change | < 500µs |
| External Trim Adj. Range (note 6) | ±10% |
| Ripple & Noise, 20MHz BW | |
| 12V & 15V | 60mV RMS, 120mV pk-pk max. |
| 24V & 28V | 100mV RMS, 280mV pk-pk max. |
| 48V | 200mV RMS, 480mV pk-pk max. |
| Temperature Coefficient | ±0.03%/°C |
| Short Circuit Protection | Continuous |
| Line Regulation (note 1) | ±0.2% max. |
| Load Regulation (note 2) | ±0.2% max. |
| Over Voltage Protection Trip Range ,% Vo nom. | 115-140% |
| Current Limit | 105%-200% Nominal Output |
| Start up time | 100ms typ. |

### GENERAL SPECIFICATIONS

| | |
|---|---|
| Efficiency | See Table |
| Isolation Voltage | Input/Output .....1500VDC min. |
| | Input/Case .....1500VDC min. |
| | Output/Case .....1500VDC min. |
| Isolation Resistance | $10^7$ ohm min. |
| Isolation Capacitance | 12V/15V ..... 3500pF typ. |
| | 24V/28V/48V ..... 2500pF typ. |
| Switching Frequency | 200KHz typ. |
| Operating Case Temperature Storage | -40˚C to 100˚C |
| Temperature | -55˚C to +105˚C |
| Thermal Shutdown, Case Temperature | 110˚C Typ. |
| Humidity | 95% RH max. Non condensing |
| MTBF | MIL-HDBK-217F, GB, 25 ˚C Full Load |
| | 665Khrs typ. |
| Dimensions | 2.28 × 2.40 x 0.5 inches |
| | (57.9 x 61.0 × 12.7 mm) |
| Case Material | Aluminum Baseplate with Plastic Case |
| Weight | 109 g |

### NOTE

1. Measured from high line to low line.
2. Measured from full load to zero load.
3. Output ripple and noise measured with 1µF tantalum (for 48Vout with 10µF aluminum), 1uF ceramic capacitor and minimum capacitor across output.
4. Logic compatibility ..... open collector ref. to -input
   Module On ..... >3.5VDC to 75VDC or open circuit
   Module Off ..... 0 to < 1.2Vdc
5. Suffix "N" to the model number with negative logic remote On/Off
   Module On ..... 0 to < 1.2Vdc
   Module Off ..... >3.5VDC to 75VDC or open circuit
6. The input external capacitor recommend to parallel with 330µF ESR< 0.7Ω to reduce the input ripple voltage.

# CHB150W10 SERIES
## 150 WATT 10:1 INPUT DC-DC CONVERTERS

### Features

**PRELIMINARY**

- 150W Isolated Output
- Efficiency up to 93%
- Fixed Switching Frequency
- Input Under-Voltage Protection
- Over Temperature Protection
- Over Voltage/Current Protection
- Remote ON/OFF
- External Synchronization Function
- Bus Capacitor Pin for Hold up Time Option
- UVLO Set up Option
- Half-Brick Size Meets Industrial standard
- Safety Meets UL62368, EN62368 and IEC62368
- Shock & Vibration Meet EN50155 (EN61373)
- Fire & Smoke Meet EN45545-2

### Mechanical Dimensions

All Dimensions In Inches[mm]
Tolerance Inches:x.xx= ±0.02, x.xxx= ±0.010
Millimeters:x.x= ±0.5, x.xx=±0.25

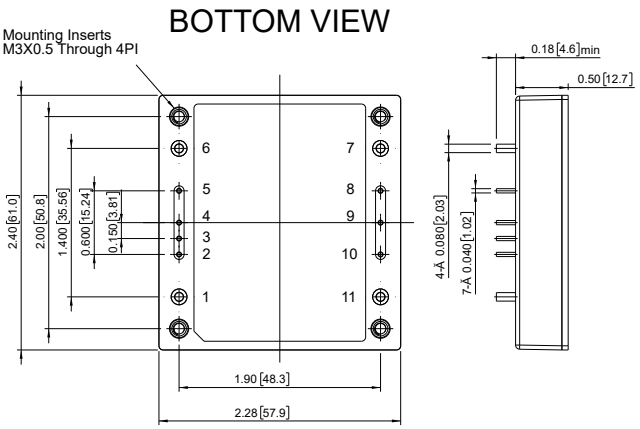


| PIN CONNECTION | |
|---|---|
| PIN | Function |
| 1 | +V Input |
| 2 | UVLO |
| 3 | Sync |
| 4 | On/Off |
| 5 | BUS |
| 6 | -V Input |
| 7 | -V Output |
| 8 | -Sense |
| 9 | Trim |
| 10 | +Sense |
| 11 | +V Output |

| MODEL NUMBER | INPUT VOLTAGE | OUTPUT VOLTAGE | OUTPUT CURRENT MIN. | OUTPUT CURRENT MAX. | INPUT CURRENT NO LOAD | INPUT CURRENT FULL LOAD | % EFF. (2) | % EFF. (3) | CAPACITOR LOAD MAX. |
|---|---|---|---|---|---|---|---|---|---|
| CHB150W10-72S05 | 16.5-140VDC | 5 VDC | 0mA | 25 A | 30 mA | 1.93 A | 90 | 90 | 25000uF |
| CHB150W10-72S12 | 16.5-140VDC | 12 VDC | 0mA | 12.5 A | 30 mA | 2.31 A | 90 | 90 | 12500uF |
| CHB150W10-72S15 | 16.5-140VDC | 15 VDC | 0mA | 10 A | 30 mA | 2.31 A | 90.5 | 93 | 10000uF |
| CHB150W10-72S24 | 16.5-140VDC | 24 VDC | 0mA | 6.25 A | 30 mA | 2.37 A | 88 | 88 | 6250uF |
| CHB150W10-72S48 | 16.5-140VDC | 48 VDC | 0mA | 3.2 A | 30 mA | 2.37 A | 90 | 90 | 2200uF |

NOTE:
1. Nominal Input Voltage 72 VDC
2. Measured at Nominal Input Voltage
3. Measured at 110VDC
4. An External Input Capacitor 100uF for All Models are Recommended to Reduce Input Ripple Voltage
5. An External Bus Capacitor 240uF for All Models

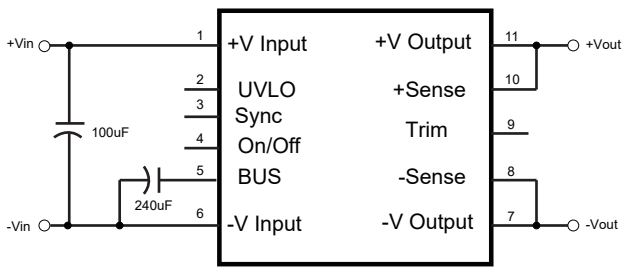


Simplified Application Circuit

## Remote On/Off Control

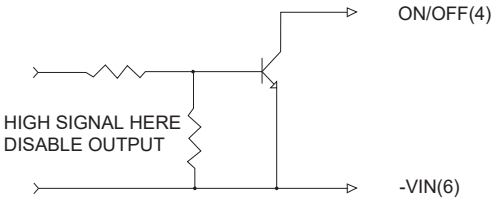


## External Output Trim

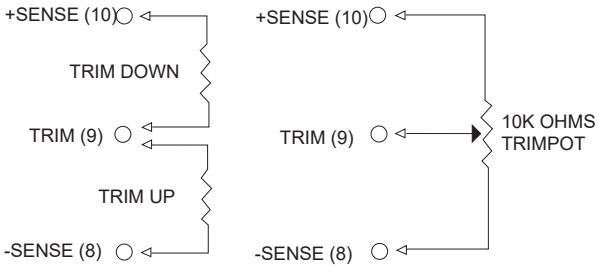


## Specifications

All Specifications Typical at Nominal Line, Full Load, and 25˚C Unless Otherwise Noted

### INPUT SPECIFICATIONS

| | |
|---|---|
| Input Voltage Range | 72V .....16.5-140V |
| Input Over Voltage Protection | Module on.....146V |
| | Module off.....156V |
| Input Surge Voltage (1s max.) | 156V max. |
| Under voltage lockout | UVLO Pin Floating |
| | 72Vin power up..... 16.0V |
| | 72Vin power down.....14.0V |
| Positive Logic Remote On/Off | See note 4 & 5 |
| Input Filter (Note 6) | Pi Type |

### OUTPUT SPECIFICATIONS

| | |
|---|---|
| Voltage Accuracy: | ±1.0% max. |
| Transient Response: 75%~100% Step Load Change | |
| Error Band | ±5% Vout Nominal, |
| Recovery Time | <250us |
| External Trim Adj. Range | +15%,-20% |
| Ripple & Noise, 20MHz BW (note 3) | |
| 5V | 100mV RMS max., 200mV pk-pk max. |
| 12, 15V | 150mV RMS max., 250mV pk-pk max.. |
| 24V | 150mV RMS max., 250mV pk-pk max. |
| 48V | 150mV RMS max., 300mV pk-pk max. |
| Temperature Coefficient | ±0.02%/°C |
| Short Circuit Protection | Continuous |
| Line Regulation (note 1) | ±0.2% |
| Load Regulation (note 2) | ±0.2% |
| Over Voltage Protection trip Range, % Vo nom. | 115-140% |
| Current Limit | 105% -140% Nominal Output. |
| Start up time | 200ms typ. |

### GENERAL SPECIFICATIONS

| | |
|---|---|
| Efficiency | See Table |
| Isolation Voltage | Input/Output ..... 3000VAC min. |
| | Input/Case ..... 3000VAC min. |
| | Output/Case ..... 500VAC min. |
| Isolation Resistance | $10^{8}$ ohm min. |
| Switching Frequency | 140KHz typ. |
| Operating Case Temperature | -40˚C to 100˚C |
| Storage Temperature | -55˚C to +125˚C |
| Thermal Shutdown, Case Temperature | 105˚C typ. |
| Humidity | 95% RH max. Non Condensing |
| MTBF ... MIL-HDBK-217F, GB, 25˚C, Full Load | T.B.D. hrs |
| Dimensions | 2.28x2.40x0.50 Inches (57.9x61.0x12.7 mm) |
| Case Material | Aluminum Baseplate with Plastic Case |
| Weight | T.B.D. g |

### NOTE

1. Measured from high line to low line
2. Measured from full load to zero load.
3. Output ripple and noise measured with 10uF tantalum and 1uF ceramic capacitor across output (48V: 10uF aluminum capacitor and 1uF ceramic capacitor across output).
4. Logic compatibility.....open collector refer to –Vin
   Module on.....>3.5Vdc to +Vin or Open Circuit
   Module off..... 0Vdc to 1.2Vdc
5. Suffix "N" to the model number with negative logic remote on/off
   Module on.....0Vdc to 1.2Vdc
   Module off.....>3.5Vdc to +Vin or Open Circuit
6. An external input capacitor 100uF for all models are recommended to reduce input ripple voltage.

# CHB200 SERIES
## 165-200 WATT

### Features

- 165W-200W Isolated Output
- Efficiency to 93%
- Fixed Switching Frequency
- Input Under-Voltage Protection
- Over Temperature Protection
- Over Voltage/Current Protection
- Remote On/Off
- Industry Standard Half-Brick Package
- Fully Isolated 1500VDC
- No Tantalum Capacitor Inside

CE

### Mechanical Dimensions

All Dimensions in Inches (mm)
Tolerance Inches: X.XX=±0.02 , X.XXX=±0.010
Millimeters: X.X=±0.5 , X.XX=±0.25

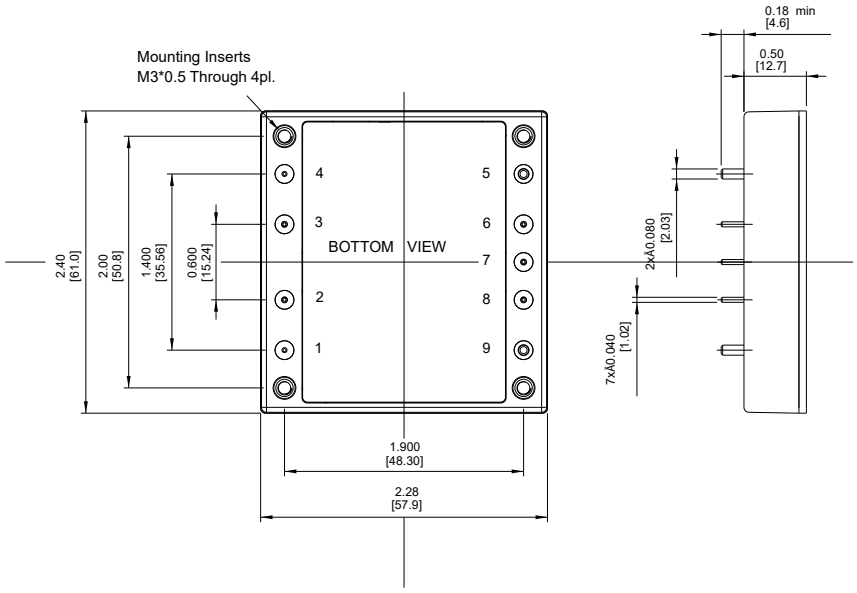


| PIN CONNECTION | |
|---|---|
| PIN | Function |
| 1 | +V Input |
| 2 | On/Off |
| 3 | Case |
| 4 | -V Input |
| 5 | -V Output |
| 6 | -Sense |
| 7 | Trim |
| 8 | +Sense |
| 9 | +V Output |

| MODEL NUMBER | INPUT VOLTAGE | OUTPUT VOLTAGE | OUTPUT CURRENT MIN. | OUTPUT CURRENT MAX. | INPUT CURRENT NO LOAD | INPUT CURRENT FULL LOAD | % EFF. | CAPACITOR LOAD MAX. |
|---|---|---|---|---|---|---|---|---|
| CHB200-24S3V3 | 18-36 VDC | 3.3 VDC | 0 mA | 50 A | 140 mA | 7.64 A | 90 | 10000µF |
| CHB200-24S05 | 18-36 VDC | 5 VDC | 0 mA | 40 A | 240 mA | 9.16 A | 91 | 10000µF |
| CHB200-24S12 | 18-36 VDC | 12 VDC | 0 mA | 16.7 A | 230 mA | 9.03 A | 92.5 | 10000µF |
| CHB200-24S24 | 18-36 VDC | 24 VDC | 0 mA | 8.3 A | 40 mA | 9.12 A | 91 | 2200µF |
| CHB200-24S48 | 18-36 VDC | 48 VDC | 0 mA | 4.2 A | 70 mA | 9.23 A | 91 | 2000µF |
| CHB200-48S3V3 | 36-75 VDC | 3.3 VDC | 0 mA | 50 A | 80 mA | 3.80 A | 90.5 | 10000µF |
| CHB200-48S05 | 36-75 VDC | 5 VDC | 0 mA | 40 A | 120 mA | 4.55 A | 91.5 | 10000µF |
| CHB200-48S12 | 36-75 VDC | 12 VDC | 0 mA | 16.7 A | 90 mA | 4.49 A | 93 | 10000µF |
| CHB200-48S24 | 36-75 VDC | 24 VDC | 0 mA | 8.3 A | 50 mA | 4.56 A | 91 | 2200µF |
| CHB200-48S48 | 36-75 VDC | 48 VDC | 0 mA | 4.2 A | 60 mA | 4.59 A | 91.5 | 2000µF |

NOTE:
1. Nominal Input Voltage 24, 48 VDC
2. The output terminal of 48Vout models required a minimum capacitor 47uF to maintain specified regulation.

## Remote On/Off Control

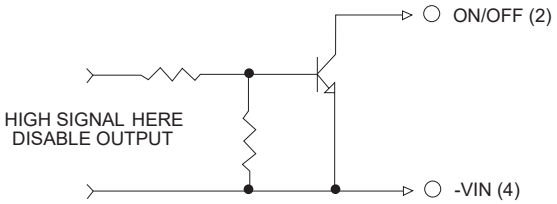


## External Output Trim

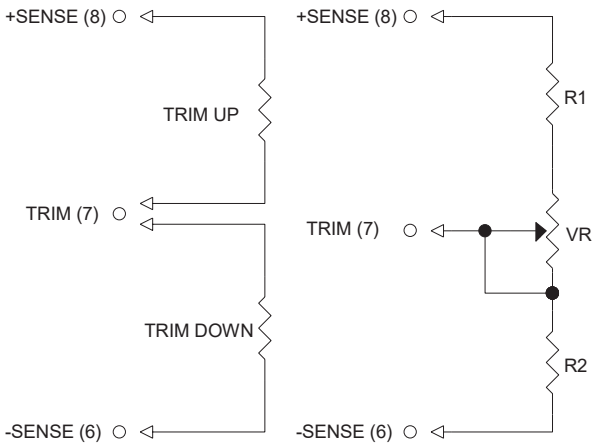


## Specifications

All Specifications Typical At Nominal Line, Full Load, and 25˚C Unless Otherwise Noted

### INPUT SPECIFICATIONS

| | | |
|---|---|---|
| Input Voltage Range | | 24V ..... 18-36V |
| | | 48V ..... 36-75V |
| Input Surge Voltage (100ms max.) | | 24V ..... 50Vdc max. |
| | | 48V ..... 100Vdc max. |
| Under voltage lockout | 24Vin | power up ..... 17V |
| | | power down ..... 16V |
| | 48Vin | power up..... 35V |
| | | power down ..... 33V |
| Positive Logic Remote On/Off: | | |
| Logic Compatibility | | Open Collector ref to -Input |
| Module On | | 3.5Vdc to 75Vdc or Open Circuit |
| Module Off | | 0 to < 1.2Vdc |
| Input Filter | | PI Type |

### OUTPUT SPECIFICATIONS

| | |
|---|---|
| Voltage Accuracy: | ±1.0% max. |
| Transient Response:25% Step Load Change | < 500µs |
| External Trim Adj. Range (note 5) | ±10% |
| Ripple & Noise, 20MHz BW | |
| 3.3V & 5V | 40mV RMS, 100mV pk-pk max., |
| 12V | 60mV RMS, 120mV pk-pk max. |
| 24V | 100mV RMS, 240mV pk-pk max. |
| 48V | 200mV RMS, 480mV pk-pk, max. |
| Temperature Coefficient | ±0.03%/°C |
| Short Circuit Protection | Continuous |
| Line Regulation (note 1) | ±0.2% max. |
| Load Regulation (note 2) | ±0.2% max. |
| Over Voltage Protection trip Range, % Vo nom. | 115-140% |
| Current Limit | 105% -140% Nominal Output |
| Start up time | 150ms typ. |

### GENERAL SPECIFICATIONS

| | |
|---|---|
| Efficiency | See Table |
| Isolation Voltage | Input/Ouput..... 1500VDC min. |
| | Input/Case..... 1500VDC min. |
| | Output/Case ..... 1500VDC min. |
| Isolation Resistance | $10^7$ ohm min. |
| Isolation Capacitance | 1000pF typ. |
| Switching Frequency | 3V3 ..... 200KHz typ. |
| | 5V ..... 300KHz typ. |
| | 12V&24V&48V .....330KHz typ. |
| Operating Case Temperature | -40˚C to 100˚C |
| Storage Temperature | -55˚C to +105˚C |
| Thermal Shutdown, Case Temp | 110˚C typ. |
| Humidity | 95% RH max. Non condensing |
| Dimensions | 2.28 × 2.40 x 0.52 inches (57.9 x 61.0 × 13.2 mm) |
| Case Material | Aluminum Baseplate with Plastic Case |
| Weight | 114 g |

### NOTE

1. Measured from high line to low line.
2. Measured from full load to zero load.
3. Output ripple and noise measured with 10µF tantalum and 1µF ceramic capacitor across output.
4. Suffix "N" to the model number with negative logic remote On/Off
   Module On ..... 0 to < 1.2Vdc
   Module Off ..... >3.5VDC to 75VDC or open circuit
5. Trim-up.....connect a resistor between the trim pin and +Sense.
   Trim-down.....connect a resistor between the trim pin and -Sense.
6. The input terminal recommend to parallel with 100µF for 48Vin and 220µF for 24Vin ESR< 0.7Ω to reduce the input ripple voltage.

# CHB200W SERIES
## 132-200 WATT, 4:1 INPUT RANGE

### Features

- 132W-200W Isolated Output
- Half Brick Package
- 4 : 1 Input Range
- Regulated Output
- Efficiency to 89%
- Input Under Voltage Protection
- Over Temperature Protection
- Over Voltage/Current Protection
- Remote On/Off Control
- 1500VDC Isolation
- Continuous Short Circuit Protection
- UL60950-1 Approval (Except 28 Vout)

E176177

### Mechanical Dimensions

All Dimensions in Inches (mm)
Tolerance Inches: X.XX=±0.02 , X.XXX=±0.010
Millimeters: X.X=±0.5 , X.XX=±0.25

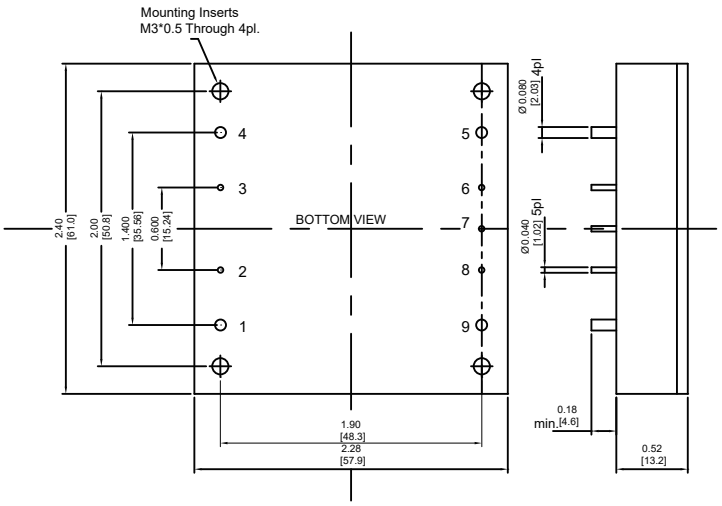


| PIN CONNECTION | |
|---|---|
| PIN | Function |
| 1 | +V Input |
| 2 | On/Off |
| 3 | Case |
| 4 | -V Input |
| 5 | -V Output |
| 6 | -Sense |
| 7 | Trim |
| 8 | +Sense |
| 9 | +V Output |

| MODEL NUMBER | INPUT VOLTAGE | OUTPUT VOLTAGE | OUTPUT CURRENT MIN. | OUTPUT CURRENT MAX. | INPUT CURRENT NO LOAD | INPUT CURRENT FULL LOAD | % EFF. | CAPACITOR LOAD MAX. |
|---|---|---|---|---|---|---|---|---|
| CHB200W-24S3V3 | 10-36 VDC | 3.3VDC | 0 mA | 50 A | 130 mA | 7.90 A | 87 | 10000µF |
| CHB200W-24S05 | 10-36 VDC | 5.0VDC | 0 mA | 40 A | 150 mA | 9.58 A | 87 | 10000µF |
| CHB200W-24S12 | 10-36 VDC | 12 VDC | 0 mA | 16.7 A | 50 mA | 9.71 A | 86 | 2200µF |
| CHB200W-24S15 | 10-36 VDC | 15 VDC | 0 mA | 13.3 A | 50 mA | 9.56 A | 87 | 2200µF |
| CHB200W-24S24 | 10-36 VDC | 24 VDC | 0 mA | 8.3 A | 45 mA | 9.54 A | 87 | 2200µF |
| CHB200W-24S28 | 10-36 VDC | 28 VDC | 0 mA | 7.14 A | 55 mA | 9.41 A | 88.5 | 2200µF(2) |
| CHB200W-24S48 | 10-36 VDC | 48 VDC | 0 mA | 4.2 A | 60 mA | 9.77 A | 86 | 2200µF(3) |
| CHB200W-48S3V3 | 18-75 VDC | 3.3VDC | 0 mA | 40 A | 80 mA | 3.13 A | 88 | 10000µF |
| CHB200W-48S05 | 18-75 VDC | 5.0VDC | 0 mA | 40 A | 80 mA | 4.68 A | 89 | 10000µF |
| CHB200W-48S12 | 18-75 VDC | 12 VDC | 0 mA | 16.7 A | 60 mA | 4.74 A | 88 | 2200µF |
| CHB200W-48S15 | 18-75 VDC | 15 VDC | 0 mA | 13.3 A | 60 mA | 4.72 A | 88 | 2200µF |
| CHB200W-48S24 | 18-75 VDC | 24 VDC | 0 mA | 8.3 A | 60 mA | 4.72 A | 88 | 2200µF |
| CHB200W-48S28 | 18-75 VDC | 28 VDC | 0 mA | 7.14 A | 50 mA | 4.68 A | 89 | 2200µF(2) |
| CHB200W-48S48 | 18-75 VDC | 48 VDC | 0 mA | 4.2 A | 50 mA | 4.83 A | 87 | 2200µF(3) |

NOTE:
1. Nominal Input Voltage 24, 48 VDC
2. The Output Terminal of 28Vout Models Required a Minimum Capacitor 100uF to Maintain Specified Regulation.
3. The Output Terminal of 48Vout Models Required a Minimum Capacitor 47uF to Maintain Specified Regulation.

## Remote On/Off Control

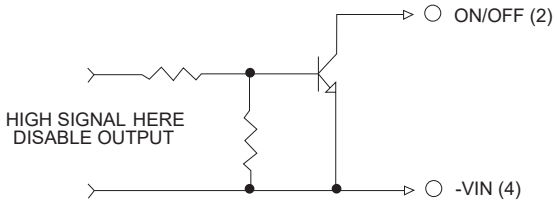


## External Output Trim

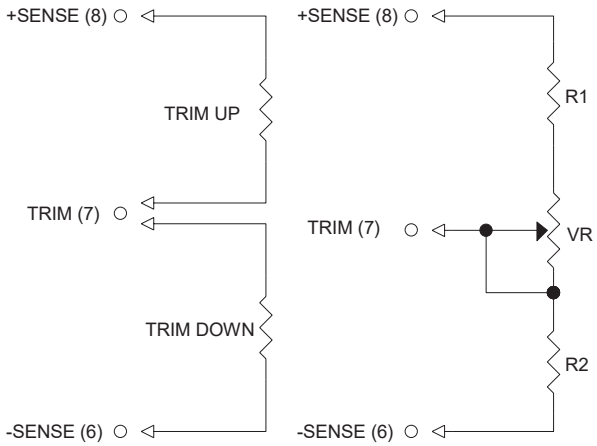


## Specifications

All Specifications Typical At Nominal Line, Full Load, and 25˚C Unless Otherwise Noted

### INPUT SPECIFICATIONS

| | | |
|---|---|---|
| Input Voltage Range | | 24V ..... 10-36V |
| | | 48V ..... 18-75V |
| Input Surge Voltage (100ms max.) | | 24V ..... 50Vdc max. |
| | | 48V ..... 100Vdc max. |
| Under Voltage Lockout | 24Vin | power up ..... 9.5V |
| | | power down ..... 8.5V |
| | 48Vin | power up ..... 17V |
| | | power down ..... 16V |
| Positive Logic Remote On/Off | | See note 4 & 5 |
| Input Filter | | Pi Type |

### OUTPUT SPECIFICATIONS

| | |
|---|---|
| Voltage Accuracy | ±1.0% max. |
| Transient Response: 25% Step Load Change | < 500µs |
| External Trim Adj. Range (note 6) | ±10% |
| Ripple & Noise, 20MHz BW (note 3) | |
| 3.3V & 5V | 40mV RMS max., 100mV pk-pk max. |
| 12V & 15V | 60mV RMS max., 150mV pk-pk max. |
| 24V | 100mV RMS max., 240mV pk-pk max. |
| 28V | 100mV RMS max., 280mV pk-pk max. |
| 48V | 150mV RMS max., 480mV pk-pk max. |
| Temperature Coefficient | ±0.03%/°C |
| Short Circuit Protection | Continuous |
| Line Regulation (note 1) | ±0.2% max. |
| Load Regulation (note 2) | ±0.2% max. |
| Over Voltage Protection Trip Range, % Vo nom. | 115-140% |
| Current Limit | 110%-150% Nominal Output |
| Start up time | 120ms typ. |

### GENERAL SPECIFICATIONS

| | |
|---|---|
| Efficiency | See Table |
| Isolation Voltage | Input/Output..... 1500VDC min. |
| | Input/Case..... 1500VDC min. |
| | Output/Case ..... 1500VDC min. |
| Isolation Resistance | $10^7$ ohm min. |
| Isolation Capacitance | 2000pF typ. |
| Switching Frequency | 250KHz typ. |
| Operating Case Temperature | -40˚C to 100˚C |
| Storage Temperature | -55˚C to +105˚C |
| Thermal Shutdown Case Temp. | 110˚C typ. |
| Humidity | 95% RH max. Non condensing |
| MTBF ..... MIL-STD-217F, GB, 25˚C, Full Load | 600Khrs typ. |
| Dimensions | 2.28 x 2.40 x 0.52 inches (57.9 x 61.0 x 13.2 mm) |
| Case Material | Aluminum Baseplate with Plastic Case |
| Weight | 114 g |

### NOTE

1. Measured from high line to low line.
2. Measured from full load to zero load.
3. Output ripple and noise measured with 10µF tantalum and 1µF ceramic capacitor across output. (48V: 10µF aluminum and 1µF ceramic capacitor across output)
4. Logic compatibility ..... open collector ref to -Input
   Module On ..... >3.5VDC to 75VDC or open circuit
   Module Off ..... 0 to < 1.2VDC
5. Suffix "N" to the model number with negative logic remote On/Off
   Module On .....0 to < 1.2VDC
   Module Off ..... >3.5VDC to 75VDC or open circuit
6. Trim-up ..... connect a resistor between the trim pin and +sense
   Trim-down ..... connect a resistor between the trim pin and -sense
7. Suffix "-C" to the model number with clear mounting insert. (3.2mm DIA.)
8. An external input capacitor 470µF for 24Vin or 47µF for 48Vin models are recommended to reduce input ripple voltage.

# CHB200W-110S SERIES
## 200 WATT 4:1 INPUT DC-DC CONVERTERS

## Features

- 200W Isolated Output
- Efficiency to 91%
- Low No Load Power Consumption
- Fixed Switching Frequency
- 4:1 Input Range
- Regulated Outputs
- Input Under-Voltage Protection
- Over Temperature Protection
- Over Voltage/Current Protection
- Remote On/Off
- Half-Brick Size Meets Industrial standard
- Safety Meets UL60950-1 2nd (Basic Insulation)
- Meets EN50155 With External Circuits
- Shock & Vibration Meet EN50155 (EN61373)
- Fire & Smoke meet EN45545-2
- 5000m Operating Altitude

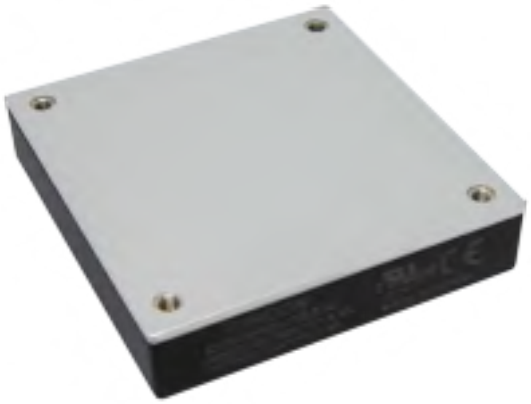

## Mechanical Dimensions

CASE HB
All Dimensions In Inches(mm)
Tolerances Inches: X.XX= ±0.02 , X.XXX= ±0.010
Millimeters: X.X= ±0.5 , X.XX=±0.25

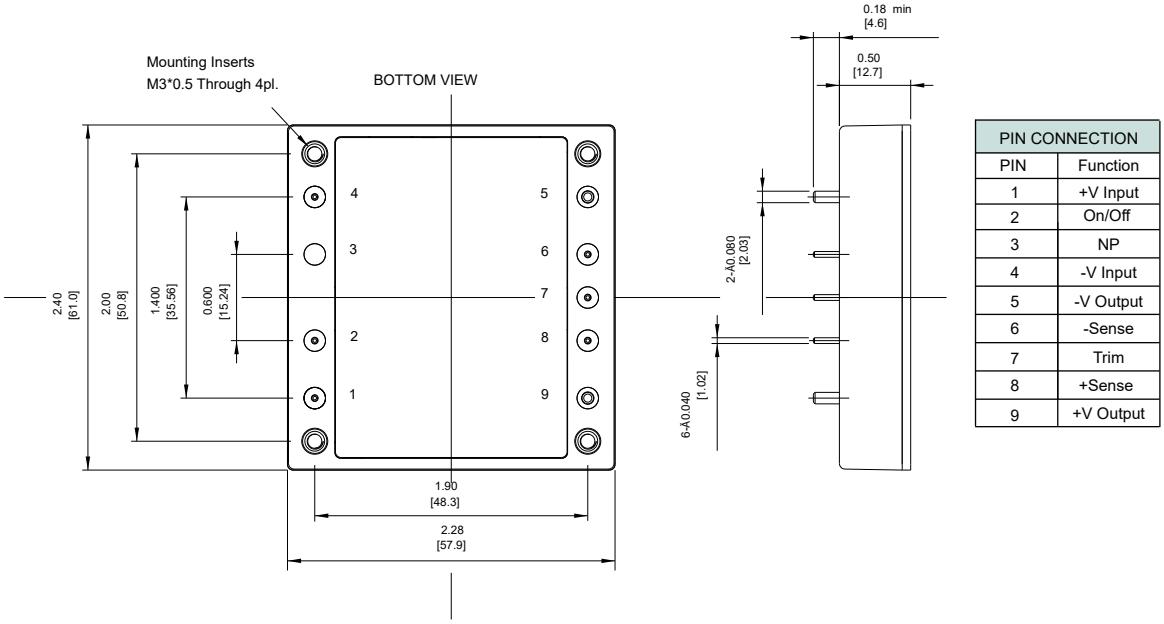


| PIN CONNECTION | |
|---|---|
| PIN | Function |
| 1 | +V Input |
| 2 | On/Off |
| 3 | NP |
| 4 | -V Input |
| 5 | -V Output |
| 6 | -Sense |
| 7 | Trim |
| 8 | +Sense |
| 9 | +V Output |

| MODEL NUMBER | INPUT VOLTAGE | OUTPUT VOLTAGE | OUTPUT CURRENT | | INPUT CURRENT | | % EFF. (2) | CAPACITOR LOAD MAX. |
|---|---|---|---|---|---|---|---|---|
| | | | MIN. | MAX. | NO LOAD | FULL LOAD | | |
| CHB200W-110S05 | 43-160 VDC | 5 VDC | 0mA | 40 A | 10 mA | 2066 mA | 88 | 40000uF |
| CHB200W-110S12 | 43-160 VDC | 12 VDC | 0mA | 16.7 A | 10 mA | 2024 mA | 90 | 16700uF |
| CHB200W-110S24 | 43-160 VDC | 24 VDC | 0mA | 8.3 A | 10 mA | 2034 mA | 89 | 8300uF |
| CHB200W-110S28 | 43-160 VDC | 28 VDC | 0mA | 7.14 A | 10 mA | 2042 mA | 89 | 7140uF |
| CHB200W-110S48 | 43-160 VDC | 48 VDC | 0mA | 4.2 A | 10 mA | 2014 mA | 91 | 3000uF |

NOTE:
1. Nominal Input Voltage 110 VDC.
2. Measure at Nominal Input Voltage.
3. An external input capacitor 220uF for all models are Recommended to Reduce Input Ripple Voltage.

## Remote On/Off Control

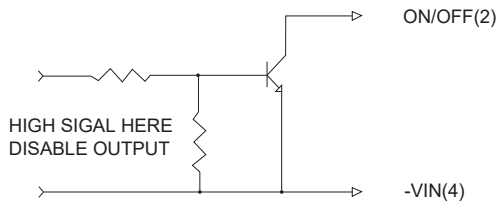


## External Output Trim

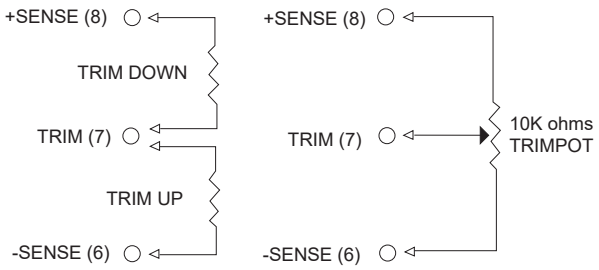


## Specifications

All Specifications Typical At Nominal Line, Full Load, and 25˚C Unless Otherwise Noted

### INPUT SPECIFICATIONS

| | |
|---|---|
| Input Voltage Range | 110V.....43-160V |
| Input Surge Voltage (100ms max.) | 110V.....200Vdc max. |
| Under Voltage Lockout | 110Vin Power Up.....42V |
| | 110Vin Power Down.....39V |
| Positive Logic Remote ON/OFF | See note 4 & 5 |
| Input Filter (note 6) | Pi Type |

### OUTPUT SPECIFICATIONS

| | |
|---|---|
| Voltage Accuracy: | ±1.0% max. |
| Transient Response: 75%~100% Step Load Change | |
| Error Band | ±5% Vout nominal, |
| Recovery Time | <250us |
| External Trim Adj. Range | +10% |
| Ripple & Noise, 20MHz BW (note 3) | |
| 5V | 60mV RMS, 120mV pk-pk max. |
| 12V | 80mV RMS, 150mV pk-pk max. |
| 24V | 120mV RMS, 240mV pk-pk max. |
| 28V | 140mV RMS, 280mV pk-pk max. |
| 48V | 220mV RMS, 480mV pk-pk max. |
| Temperature Coefficient | ±0.02%/°C max |
| Short Circuit Protection | Continuous |
| Line Regulation (note 1) | ±0.2% max |
| Load Regulation (note 2) | ±0.2% max |
| Over Voltage Protection trip Range, % Vo nom. | 115 - 140% |
| Current Limit | 110% -160% Nominal Output. |
| Start up time | 35ms typ. |

### GENERAL SPECIFICATIONS

| | |
|---|---|
| Efficiency | See Table |
| Isolation Voltage | Input/Output ..... 3000VDC min. |
| | Input/Case ..... 3000VDC min. |
| | Output/Case ..... 500VAC min. |
| Isolation Resistance | $10^8$ ohm min. |
| Isolation Capacitance | 3000pF typ. |
| Switching Frequency | 300KHz typ |
| Operating Case Temperature | -40˚C to 100˚C |
| Storage Temperature | -55˚C to +125˚C |
| Thermal Shutdown, Case Temperature | 110˚C typ. |
| Humidity | 95% RH max. Non condensing |
| MTBF ... MIL-HDBK-217F, GB, 25˚C, Full Load | 48V .....TBDKhrs typ. |
| | Others..... TBDKhrs typ. |
| Safety | Meet UL60950-1 2nd(Basic Insulation) |
| EMC (note7) | Meet EN50155 (EN50121-3-2) with External Filter. |
| Shock/Vibration | Meet EN50155(EN61373) |
| Environmental | Meet EN50155(EN60068-2-1,2,30). |
| Fire & Smoke | Meet EN45545-2 |
| Dimensions | 2.28x2.40x0.50 inches (57.9x61.0x12.7 mm) |
| Case Material | Aluminum Baseplate with Plastic Case |
| Weight | 114g |

### NOTE

1. Measured from high line to low line.
2. Measured from full load to zero load.
3. Output ripple and noise measured with 10uF aluminum solid capacitor and 1uF ceramic capacitor across output. (5V: 47uF polymer tantalum capacitor and 1uF ceramic capacitor across output).
4. Logic compatibility ..... open collector ref to -Input
   Module on..... >3.5Vdc to 160Vdc or open circuit
   Module off .....0 to <1.2Vdc
5. Suffix "N" to the model number with negative logic remote on/off
   Module on ..... 0 to <1.2Vdc
   Module off ..... >3.5Vdc to 160Vdc or open circuit
6. An external input capacitor 220uF for all models are recommended to reduce input ripple voltage.
7. For information about EN50155 and RIA12, refer to application note.
8. Suffix "-C" to the model number with clear mounting insert. (3.2mm DIA).

# CHB200W10 SERIES
## 200 WATT 10:1 INPUT DC-DC CONVERTERS

### Features

**PRELIMINARY**

- 200W Isolated Output
- Efficiency to 93%
- Fixed Switching Frequency
- Input Under-Voltage Protection
- Over Temperature Protection
- Over Voltage/Current Protection
- Remote On/Off
- External Synchronization Function
- Bus Capacitor Pin for Hold Up Time Option
- UVLO Set Up Option
- Half-Brick size meets Industrial standard
- Safety Meets UL62368, EN62368 and IEC62368
- Shock & Vibration Meet EN50155 (EN61373)
- Fire & Smoke Meet EN45545-2

### Mechanical Dimensions

All Dimensions In Inches[mm]
Tolerance Inches:x.xx= ±0.02, x.xxx= ±0.010
Millimeters:x.x= ±0.5, x.xx=±0.25

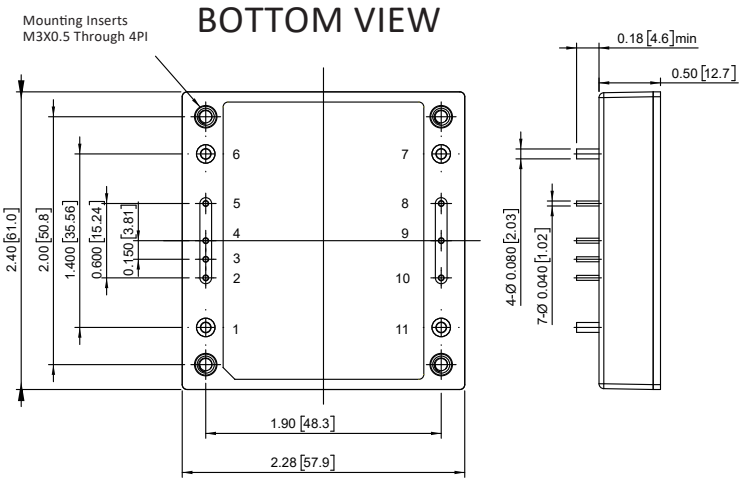


| PIN CONNECTION | |
|---|---|
| PIN | Function |
| 1 | +V Input |
| 2 | UVLO |
| 3 | Sync |
| 4 | On/Off |
| 5 | BUS |
| 6 | -V Input |
| 7 | -V Output |
| 8 | -Sence |
| 9 | Trim |
| 10 | +Sence |
| 11 | +V Output |

| MODEL NUMBER | INPUT VOLTAGE | OUTPUT VOLTAGE | OUTPUT CURRENT MIN. | OUTPUT CURRENT MAX. | INPUT CURRENT NO LOAD | INPUT CURRENT FULL LOAD | % EFF. (2) | % EFF. (3) | CAPACITOR LOAD MAX. |
|---|---|---|---|---|---|---|---|---|---|
| CHB200W10-72S05 | 16.5-140VDC | 5 VDC | 0mA | 40 A | 20 mA | 3.09 A | 90 | 90 | 40000uF |
| CHB200W10-72S12 | 16.5-140VDC | 12 VDC | 0mA | 16.7 A | 20 mA | 3.09 A | 90 | 90 | 16700uF |
| CHB200W10-72S15 | 16.5-140VDC | 15 VDC | 0mA | 13.5A | 20 mA | 3.07 A | 91.5 | 93 | 13500uF |
| CHB200W10-72S24 | 16.5-140VDC | 24 VDC | 0mA | 8.5 A | 20 mA | 3.22 A | 88 | 88 | 8000uF |
| CHB200W10-72S48 | 16.5-140VDC | 48 VDC | 0mA | 4.2 A | 20 mA | 3.11 A | 90 | 90 | 4000uF |

NOTE:
1. Nominal Input Voltage 72 VDC
2. Measured at Nominal Input Voltage
3. Measured at 110VDC
4. An External Input Capacitor 100uF for All Models are Recommended to Reduce Input Ripple Voltage
5. An External Bus Capacitor 240uF for All Models

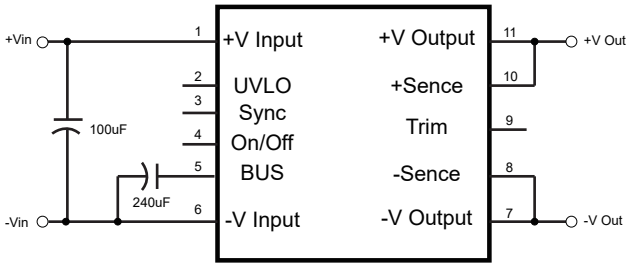


Simplified Application Circuit

## Remote On/Off Control

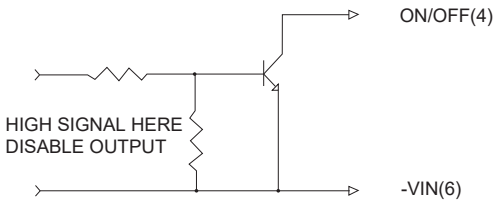


## External Output Trim

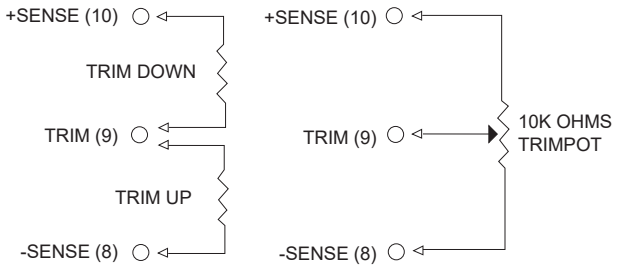


## Specifications

All Specifications Typical at Nominal Line, Full Load, and 25˚C Unless Otherwise Noted

### INPUT SPECIFICATIONS

| | |
|---|---|
| Input Voltage Range | 72V.....16.5-140V |
| Input Over Voltage Protection | Module on.....146V |
| | Module off.....156V |
| Input Surge Voltage (1s max.) | 156V max |
| Under Voltage Lockout | UVLO Pin Floating |
| | 72Vin power up.....16.0V |
| | 72Vin power down.....14.0V |
| Positive Logic Remote ON/OFF | See note 4 & 5 |
| Input Filter (note 6) | Pi Type |

### OUTPUT SPECIFICATIONS

| | |
|---|---|
| Voltage Accuracy: | ±1.0% max. |
| Transient Response: 75%~100% Step Load Change | |
| Error Band | ±5% Vout Nominal, |
| Recovery Time | <250us |
| External Trim Adj. Range | +15%,-20% |
| Ripple & Noise, 20MHz BW (note 3) | |
| 5V | 100mV RMS max., 200mV pk-pk max. |
| 12, 15V | 150mV RMS max., 250mV pk-pk max. |
| 24V | 150mV RMS max., 300mV pk-pk max. |
| 48V | 150mV RMS max., 350mV pk-pk max. |
| Temperature Coefficient | ±0.02%/°C max |
| Short Circuit Protection | Continuous |
| Line Regulation (note 1) | ±0.2% max |
| Load Regulation (note 2) | ±0.2% max |
| Over Voltage Protection trip Range, % Vo nom. | 115 - 140% |
| Current Limit | 105% ~140% Nominal Output |
| Start up time | 200ms typ. |

### GENERAL SPECIFICATIONS

| | |
|---|---|
| Efficiency | See Table |
| Isolation Voltage | Input/Output ..... 3000VAC min. |
| | Input/Case ..... 3000VAC min. |
| | Output/Case ..... 500VAC min. |
| Isolation Resistance | $10^8$ ohm min. |
| Switching Frequency | 140KHz typ. |
| Operating Case Temperature | -40˚C to 100˚C |
| Storage Temperature | -55˚C to +125˚C |
| Thermal Shutdown, Case Temperature | 105˚C typ. |
| Humidity | 95% RH max. Non Condensing |
| MTBF ... MIL-HDBK-217F, GB, 25˚C, Full Load | T.B.D. hrs |
| Dimensions | 2.28x2.40x0.50 Inches (57.9x61.0x12.7 mm) |
| Case Material | Aluminum Baseplate with Plastic Case |
| Weight | T.B.D. g |

### NOTE

1. Measured from high line to low line
2. Measured from full load to zero load
3. Output ripple and noise measured with 10uF tantalum and 1uF ceramic capacitor across output (48V: 10uF aluminum capacitor and 1uF ceramic capacitor across output).
4. Logic compatibility.....open collector refer to –Vin
   Module on.....>3.5Vdc to +Vin or Open Circuit
   Module off..... 0Vdc to 1.2Vdc
5. Suffix "N" to the model number with negative logic remote on/off
   Module on.....0Vdc to 1.2Vdc
   Module off.....>3.5Vdc to +Vin or Open Circuit
6. An external input capacitor 100uF for all models are recommended to reduce input ripple voltage.

# CHB300W SERIES
## 300 WATT, 4:1 INPUT RANGE

### Features

- 300W Isolated Output
- Efficiency to 92%
- Fixed Switching Frequency
- Input Under Voltage Protection
- Over Temperature Protection
- Over Voltage/Current Protection
- Remote On/Off
- Industry Standard Half-Brick Package
- Fully Isolated 1500VDC
- UL60950-1 2nd Approval

### Mechanical Dimensions

All Dimensions in Inches (mm)
Tolerance Inches: X.XX=±0.02 , X.XXX=±0.010
Millimeters: X.X=±0.5 , X.XX=±0.25

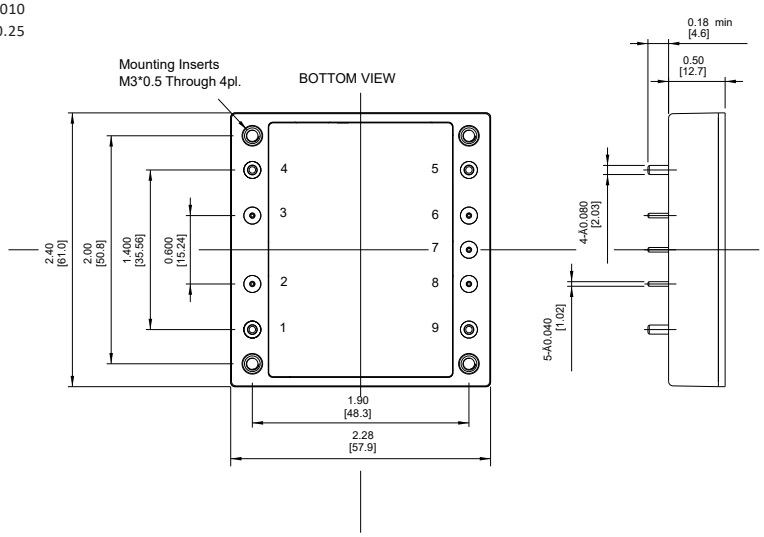


| PIN CONNECTION | |
|---|---|
| PIN | Function |
| 1 | +V Input |
| 2 | On/Off |
| 3 | Case |
| 4 | -V Input |
| 5 | -V Output |
| 6 | -Sense |
| 7 | Trim |
| 8 | +Sense |
| 9 | +V Output |

| MODEL NUMBER | INPUT VOLTAGE | OUTPUT VOLTAGE | OUTPUT CURRENT MIN. | OUTPUT CURRENT MAX. | INPUT CURRENT NO LOAD | INPUT CURRENT FULL LOAD | % EFF. (2) | % EFF. (3) | CAPACITOR LOAD MAX. |
|---|---|---|---|---|---|---|---|---|---|
| CHB300W-24S05 | 9-36 VDC | 5 VDC | 0 mA | 60 A | 200 mA | 14.12 A | 88 | 88.5 | 470 -10000µF |
| CHB300W-24S12 | 9-36 VDC | 12 VDC | 0 mA | 25 A | 200 mA | 13.74 A | 91 | 91 | 330-10000µF |
| CHB300W-24S15 | 9-36 VDC | 15 VDC | 0 mA | 20 A | 250 mA | 13.74 A | 91 | 91 | 0-10000µF |
| CHB300W-24S24 | 9-36 VDC | 24 VDC | 0 mA | 12.5 A | 80 mA | 14.20 A | 88 | 88 | 220-4700µF |
| CHB300W-24S28 | 9-36 VDC | 28 VDC | 0 mA | 10.7 A | 80 mA | 14.12 A | 88.5 | 88.5 | 220-4700µF |
| CHB300W-24S48 | 9-36 VDC | 48 VDC | 0 mA | 6.25 A | 100 mA | 14.20 A | 88 | 88 | 220-2200µF |
| CHB300W-48S05 | 18-75 VDC | 5 VDC | 0 mA | 60 A | 100 mA | 6.94 A | 89 | 90 | 0-10000µF |
| CHB300W-48S12 | 18-75 VDC | 12 VDC | 0 mA | 25 A | 100 mA | 6.94 A | 92 | 92 | 0-10000µF |
| CHB300W-48S15 | 18-75 VDC | 15 VDC | 0 mA | 20 A | 130 mA | 6.80 A | 92 | 92 | 0-10000µF |
| CHB300W-48S24 | 18-75 VDC | 24 VDC | 0 mA | 12.5 A | 60 mA | 6.98 A | 90 | 89 | 0-4700µF |
| CHB300W-48S28 | 18-75 VDC | 28 VDC | 0 mA | 10.7 A | 60 mA | 6.94 A | 91 | 89.5 | 0-4700µF |
| CHB300W-48S48 | 18-75 VDC | 48 VDC | 0 mA | 6.25 A | 80 mA | 7.02 A | 90 | 89 | 220-2200µF |

NOTE:
1. Nominal Input Voltage 24,48 VDC
2. Measure at 12VDC for 24Sxx and 24VDC for 48Sxx Models
3. Measure at Nominal Input Voltage
4. The Output Terminal of Models Required a Minimum Capacitor to Maintain Specified Regulation
5. Output Peak Power 350W < 3 seconds with Maximum Duty Cycle of 10%, Average Output Power not to Exceed 300W.

## Remote On/Off Control

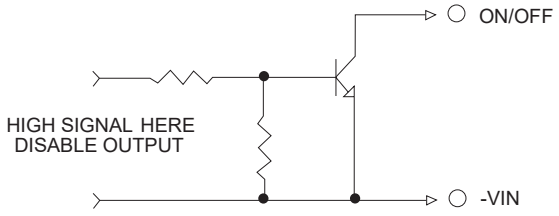


## External Output Trim

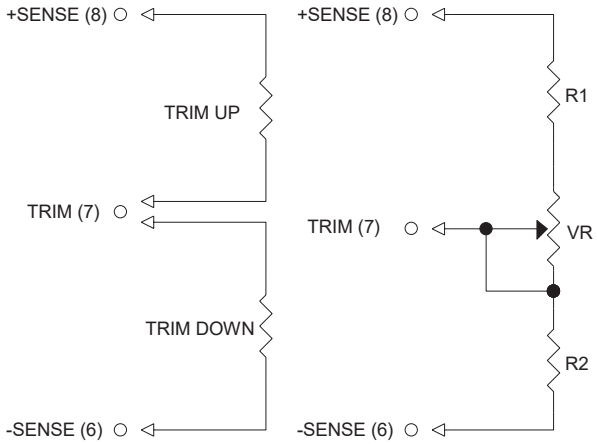


## Specifications

All Specifications Typical At Nominal Line, Full Load, and 25˚C Unless Otherwise Noted

### INPUT SPECIFICATIONS

| | | |
|---|---|---|
| Input Voltage Range | | 24V..... 9-36V |
| | | 48V ..... 18-75V |
| Input Surge Voltage (100ms max.) | | 24V ..... 50Vdc max. |
| | | 48V ..... 100Vdc max. |
| Under Voltage Lockout | 24Vin | power up ..... 8.8V |
| | | power down ..... 8.0V |
| | 48Vin | power up ..... 17V |
| | | power down ..... 16V |
| Positive Logic Remote On/Off | | See note 4 & 5 |
| Input Filter | | 24SXX and 48S15..... LC Type |
| | | Other 48SXX ..... Pi Type |

### OUTPUT SPECIFICATIONS

| | |
|---|---|
| Voltage Accuracy | ±1.0% max. |
| Transient Response: 25% Step Load Change | < 500µs |
| External Trim Adj. Range (note 6) | ±10% |
| Ripple & Noise, 20MHz BW (note 3) | |
| 5.0V | 40mV RMS, 100mV pk-pk max. |
| 12V | 60mV RMS, 120mV pk-pk max. |
| 15V | 80mV RMS, 200mV pk-pk max. |
| 24V & 28V | 100mV RMS, 280mV pk-pk max. |
| 48V | 200mV RMS, 480mV pk-pk max. |
| Temperature Coefficient | ±0.03%/°C |
| Short Circuit Protection | Continuous |
| Line Regulation (note 1) | ±0.2% max. |
| Load Regulation (note 2) | ±0.2% max. |
| Over Voltage Protection Trip Range, % Vo nom. | 115-140% |
| Current Limit | 120%-160% Nominal Output |
| Start up time | 120ms typ. |

### GENERAL SPECIFICATIONS

| | |
|---|---|
| Efficiency | See Table |
| Isolation Voltage | Input/Output ..... 1500VDC min. |
| | Input/Case .....1500VDC min. |
| | Output/Case ..... 1500VDC min. |
| Isolation Resistance | $10^7$ ohm min. |
| Isolation Capacitance | 2000pF typ. |
| Switching Frequency | 220KHz typ. |
| Operating Case Temperature | -40˚C to 100˚C |
| Storage Temperature | -55˚C to +105˚C |
| Thermal Shutdown Case Temperature | 110˚C typ. |
| Humidity | 95% RH max. Non condensing |
| MTBF ..... MIL-STD-217F, GB, 25˚C, Full Load | 600Khrs |
| Dimensions | 2.28 x 2.40 x 0.50 inches (57.9 x 61.0 x 12.7 mm) |
| Case Material | Aluminum Baseplate with Plastic Case |
| Weight | 114 g |

### NOTE

1. Measured from high line to low line.
2. Measured from full load to zero load.
3. The output ripple and noise measurement with 10µF tantalum (for 24S05 with 330µF tantalum , 24S12 with 100µF tantalum and 48Vout with 10µF aluminum) 1uF ceramic capacitor and minimum capacitor across output,
4. Logic compatibility ..... open collector ref. to -input
   Module On ..... >3.5VDC to 75VDC or open circuit
   Module Off ..... 0 to < 1.2VDC
5. Suffix "N" to the model number with negative logic remote On/Off.
   Module On ..... 0 to < 1.2VDC
   Module Off ..... >3.5VDC to 75VDC or open circuit
6. Trim-up.....connect a resistor between the trim pin and +sense.
   Trim-down.....connect a resistor between the trim pin and –sense.
7. The input terminal recommend to parallel with 1000µF for 24Vin, 470µF for 48S15 model and 220µF for other 48Vin models ESR< 0.7Ω to reduce the input ripple voltage.
8. Suffix "-C" to the model number with clear mounting insert. (3.2mm DIA)

# CHB300W-110S SERIES
## 300 WATT, INPUT RANGE 43-160 VDC

## Features

- 198-300W Isolated Output
- Efficiency to 91%
- Low No Load Power Consumption
- Fixed Switching Frequency
- 4 : 1 Input Range
- Regulated Outputs
- Input Under-Voltage Protection
- Over Temperature Protection
- Over Voltage/Current Protection
- Remote On/Off
- Half-Brick Size Meets Industrial Standard
- UL60950-1 2nd (Basic Insulation) Approval (Except3.3Vout)
- CB Test Certificate IEC60950-1 (Except 3.3Vout)
- Meets EN50155 With External Circuits
- Shock & Vibration Meet EN50155 (EN61373)
- Fire & Smoke Meet EN45545-2
- 5000m Operating Altitude

E176177

## Mechanical Dimensions

All Dimensions in Inches (mm)
Tolerance Inches: X.XX=±0.02 , X.XXX=±0.010
Millimeters: X.X=±0.5 , X.XX=±0.25

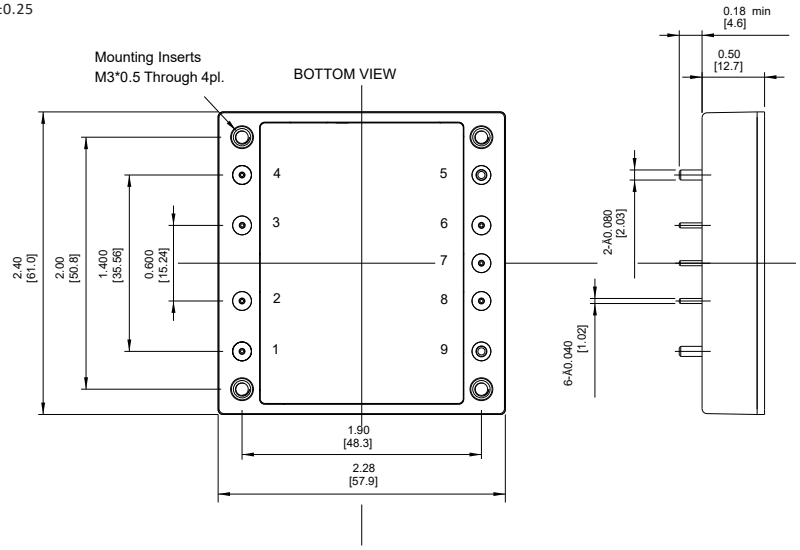


| PIN | Function |
|---|---|
| 1 | +V Input |
| 2 | ON/OFF |
| 3 | NC |
| 4 | -V Input |
| 5 | -V Output |
| 6 | -Sense |
| 7 | Trim |
| 8 | +Sense |
| 9 | +V Output |

| MODEL NUMBER | INPUT VOLTAGE | OUTPUT VOLTAGE | OUTPUT CURRENT MIN. | OUTPUT CURRENT MAX. | INPUT CURRENT NO LOAD | INPUT CURRENT FULL LOAD | % EFF. (2) | CAPACITOR LOAD MAX. |
|---|---|---|---|---|---|---|---|---|
| CHB300W-110S3V3 | 43-160 VDC | 3.3 VDC | 0 mA | 60 A | 10 mA | 2093 mA | 86 | 60000µF |
| CHB300W-110S05 | 43-160 VDC | 5 VDC | 0 mA | 60 A | 10 mA | 3099 mA | 88 | 60000µF |
| CHB300W-110S12 | 43-160 VDC | 12 VDC | 0 mA | 25 A | 10 mA | 3030 mA | 90 | 25000µF |
| CHB300W-110S24 | 43-160 VDC | 24 VDC | 0 mA | 12.5 A | 10 mA | 3064 mA | 89 | 12500µF |
| CHB300W-110S28 | 43-160 VDC | 28 VDC | 0 mA | 10.7 A | 10 mA | 3064 mA | 89 | 10700µF |
| CHB300W-110S48 | 43-160 VDC | 48 VDC | 0 mA | 6.25 A | 10 mA | 2997 mA | 91 | 4700µF |

NOTE:
1. Nominal Input Voltage 110 VDC.
2. Measure at Nominal Input Voltage.

## Remote On/Off Control

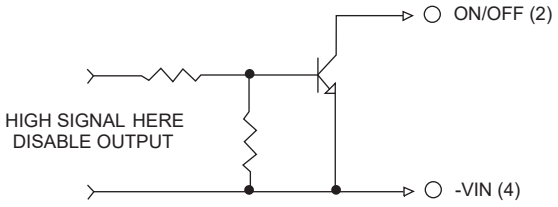


## External Output Trim

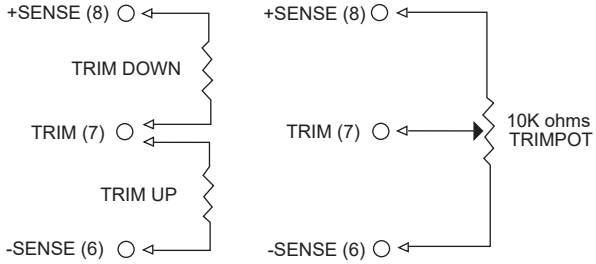


## Specifications

All Specifications Typical At Nominal Line, Full Load, and 25˚C Unless Otherwise Noted

### INPUT SPECIFICATIONS

| | |
|---|---|
| Input Voltage Range | 110V .....43-160V |
| Input Surge Voltage (100ms max.) | 110V .....200Vdc max. |
| Under Voltage Lockout | 110Vin power up.....42V<br>power down..39V |
| Positive Logic Remote On/Off | See note 4 & 5 |
| Input Filter(note 7) | Pi Type |

### OUTPUT SPECIFICATIONS

| | |
|---|---|
| Voltage Accuracy | ±1.0% max. |
| Transient Response: | |
| 25% Step Load Change | |
| Recover Time | <250µs |
| External Trim Adj. Range | ±10% |
| Ripple & Noise, 20MHz BW (note 3) | |
| 3.3 & 5V | 60mV RMS, 120mV pk-pk max. |
| 24V | 80mV RMS, 150mV pk-pk max. |
| 28V | 120mV RMS, 240mV pk-pk max. |
| 48V | 140mV RMS, 280mV pk-pk max. |
| Temperature Coefficient | 220mV RMS, 480mV pk-pk max. |
| Short Circuit Protection . | ±0.02%/°C |
| Line Regulation (note 1) | Continuous |
| Load Regulation (note 2) | ±0.2% max. |
| | ±0.2% max. |
| Over Voltage Protection Trip Range, % Vo nom. | 115-140% |
| Current Limit | 110%-160% Nominal Output |
| Start up time | 35ms typ. |

### GENERAL SPECIFICATIONS

| | | |
|---|---|---|
| Efficiency | | See Table |
| Isolation Voltage | Input/Output, Input/Case | 3000VDC min. |
| | Output/Case | 500VAC min. |
| Isolation Resistance | | $10^8$ ohm min. |
| Isolation Capacitance | | 3000pF typ. |
| Switching Frequency | | 3.3V ..... 250KHz typ.<br>Others ....300KHz typ. |
| Operating Case Temperature Storage | | -40˚C to 100˚C |
| Temperature | | -55˚C to +125˚C |
| Thermal Shutdown Case Temp. | | 110˚C typ. |
| Humidity | | 95% RH max. Non condensing |
| MTBF | | MIL-HDBK-217F, GB,25˚C, Full Load<br>48V:900Khrs typ.<br>Others:600Khrs typ. |
| Safety | | UL60950-1 2nd (Basic Insulation) |
| EMC (note 7) | | EN50155 (EN50121-3-2)<br>with External Filter |
| Shock/Vibration | | EN50155 (EN61373) |
| Environmental | | EN50155 (EN60068-2-1) |
| Fire & Smoke | | Meet EN45545-2 |
| Dimensions | | 2.28 × 2.40 x 0.52 inches<br>(57.9 x 61.0 × 13.2 mm) |
| Case Material | | Aluminum Baseplate with Plastic Case |
| Weight | | 114g |

### NOTE

1. Measured from high line to low line.
2. Measured from full load to zero load.
3. Output ripple and noise measured with 10uF aluminum solid capacitor and 1uF ceramic capacitor across output. (3.3V&5V: 47uF polymer tantalum capacitor and 1uF ceramic capacitor across output).
4. Logic compatibility ..... open collector ref to -input
   Module On ..... >3.5VDC to 160Vdc or Open Circuit
   Module Off .....0 to <1.2Vdc
5. Suffix "N" to the model number with negative logic remote On/Off
   Module On ..... 0 to <1.2Vdc
   Module Off ..... >3.5VDC to 160Vdc or open circuit
6. An external input capacitor 220µF for all models are recommended to reduce input ripple voltage.
7. For information about EN50155 and RIA12, refer to application note.
8. Suffix "-C" to the model number with clear mounting insert. (3.2mm DIA).

# CHB300-300S SERIES

## 300 WATT, INPUT RANGE 180-425 VDC

### Features

- 300W Isolated Output
- Efficiency to 90%
- Fixed Switching Frequency
- Input Under-Voltage Protection
- Over Temperature Protection
- Low No Load Power Consumption
- Over Voltage/Current Protection
- Remote On/Off
- Half-Brick Size Meets Industrial Standard
- UL60950-1 2nd (Reinforced Insulation) Approval
- CB Test Certificate IEC60950-1

E176177

### Mechanical Dimensions

All Dimensions in Inches (mm)
Tolerance Inches: X.XX=±0.02 , X.XXX=±0.010
Millimeters: X.X=±0.5 , X.XX=±0.25

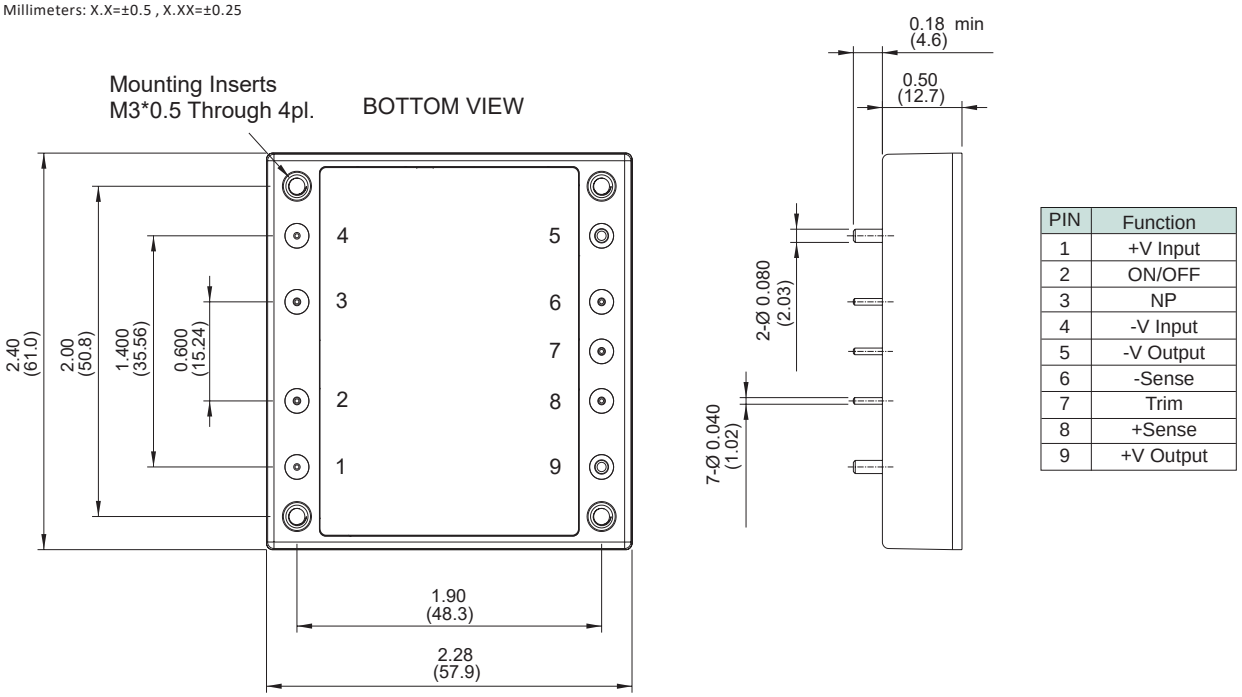


| PIN | Function |
|---|---|
| 1 | +V Input |
| 2 | ON/OFF |
| 3 | NP |
| 4 | -V Input |
| 5 | -V Output |
| 6 | -Sense |
| 7 | Trim |
| 8 | +Sense |
| 9 | +V Output |

| MODEL NUMBER | INPUT VOLTAGE | OUTPUT VOLTAGE | OUTPUT CURRENT | | INPUT CURRENT | | % EFF. | CAPACITOR LOAD MAX. |
|---|---|---|---|---|---|---|---|---|
| | | | MIN. | MAX. | NO LOAD | FULL LOAD | | |
| CHB300-300S05 | 180-425 VDC | 5 VDC | 0 mA | 60 A | 10 mA | 1920 mA | 89 | 10000µF |
| CHB300-300S12 | 180-425 VDC | 12 VDC | 0 mA | 25 A | 10 mA | 1920 mA | 88 | 10000µF |
| CHB300-300S24 | 180-425 VDC | 24 VDC | 0 mA | 12.5 A | 10 mA | 1870 mA | 90 | 6000µF |
| CHB300-300S28 | 180-425 VDC | 28 VDC | 0 mA | 10.7 A | 10 mA | 1870 mA | 90 | 6000µF |
| CHB300-300S48 | 180-425 VDC | 48 VDC | 0 mA | 6.25 A | 10 mA | 1870 mA | 90 | 3000µF |

## Remote On/Off Control

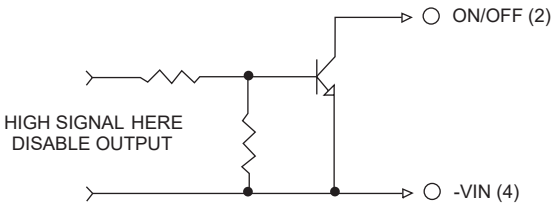


## External Output Trim

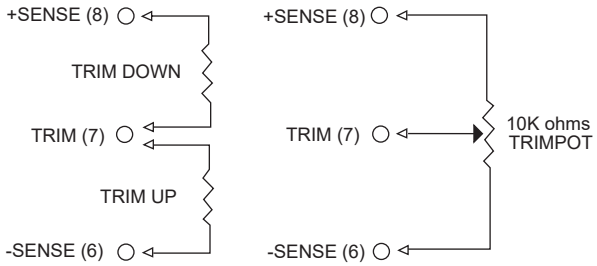


## Specifications

All Specifications Typical At Nominal Line, Full Load, and 25˚C Unless Otherwise Noted

### INPUT SPECIFICATIONS

| | |
|---|---|
| Input Voltage Range. | 300V..... 180-425V |
| Under voltage lockout | 300Vin power up ..... 170V<br>300Vin power down.....160V |
| Positive Logic Remote On/Off | See note 5 & 6 |
| Input Filter | Pi Type |

### OUTPUT SPECIFICATIONS

| | |
|---|---|
| Voltage Accuracy : | ±1.0% max. |
| Transient Response:25% Step Load Change | < 250µs |
| External Trim Adj. Range | +10%, -20% |
| Ripple & Noise, 20MHz BW (3) | |
| 5V | 60mV RMS max.,<br>120mV pk-pk max |
| 12V | 60mV RMS max.,<br>150mV pk-pk max. |
| 24V | 120mV RMS max.,<br>240mV pk-pk max. |
| 28V | 150mV RMS max.,<br>280mV pk-pk max. |
| 48V | 200mV RMS max.,<br>480mV pk-pk max. |
| Temperature Coefficient | ±0.02%/°C |
| Short Circuit Protection | Continuous |
| Line Regulation (1) | ±0.2% max. |
| Load Regulation (2) | ±0.2% max. |
| Over Voltage Protection trip Range ,% Vo nom | 115-140% |
| Current Limit | 105%-140% Nominal Output |
| Start up time | 300ms typ. |

### GENERAL SPECIFICATIONS

| | |
|---|---|
| Efficiency. | See Table |
| Isolation Voltage | Input/Output..... 3000VAC min.<br>Input/Case.....2500VAC min.<br>Output/Case.....500VAC min. |
| Isolation Resistance | $10^8$ ohm min. |
| Switching Frequency | 300KHz typ. |
| Operating Case Temperature Storage | -40˚C to 100˚C |
| Temperature | -55˚C to +105˚C |
| Thermal Shutdown, Case Temp. | 105˚C Typ. |
| Humidity | 95% RH max. Non condensing |
| MTBF | MIL-HDBK-217F, GB,25˚C, Full Load<br>5V :470Khrs typ.,<br>12V:590Khrs typ.,<br>Others:760Khrs typ. |
| Dimensions | 2.28 × 2.40 x 0.52 inches<br>(57.9 x 61.0 × 13.2 mm) |
| Case Material | Aluminum Baseplate with Plastic Case |
| Weight | 90g |

### NOTE

1. Measured from high line to low line.
2. Measured from full load to zero load.
3. Output ripple and noise measured with 10uF tantalum capacitor and 1uF ceramic capacitor across output.
   (5V: 47uF polymer tantalum capacitor and 1uF ceramic capacitor across output).
   (48V: 10uF aluminum capacitor and 1uF ceramic capacitor across output).
4. Logic compatibility.....open collector refer to -Vin
   Module On.....>3.5VDC to 75VDC or open circuit
   Module On.....0 to <1.2Vdc
5. Suffix "N" to the model number with negative logic remote on/off
   Module On.....0 to <1.2Vdc
   Module On.....>3.5VDC to 75VDC or open circuit

# CHB350 SERIES
## 231-350 WATT

## Features

- 231W-350W Isolated Output
- Efficiency to 92.5%
- Fixed Switching Frequency
- Input Under Voltage Protection
- Over Temperature Protection
- Over Voltage/Current Protection
- Remote On/Off
- Industry Standard Half-Brick Package
- Fully Isolated 1500VDC
- UL60950-1 Approval
- High Power Density 123W/in$^3$

E176177

## Mechanical Dimensions

All Dimensions in Inches (mm)
Tolerance Inches: X.XX=±0.02 , X.XXX=±0.010
Millimeters: X.X=±0.5 , X.XX=±0.25

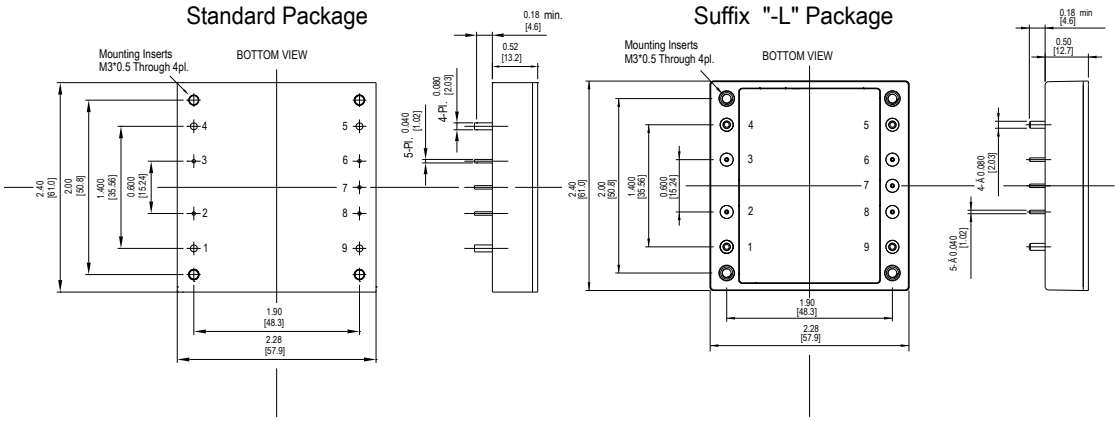


| PIN CONNECTION | |
|---|---|
| PIN | Function |
| 1 | +V Input |
| 2 | On/Off |
| 3 | Case |
| 4 | -V Input |
| 5 | -V Output |
| 6 | -Sense |
| 7 | Trim |
| 8 | +Sense |
| 9 | +V Output |

| MODEL NUMBER | INPUT VOLTAGE | OUTPUT VOLTAGE | OUTPUT CURRENT MIN. | OUTPUT CURRENT MAX. | INPUT CURRENT NO LOAD | INPUT CURRENT FULL LOAD | % EFF. | CAPACITOR LOAD MAX. |
|---|---|---|---|---|---|---|---|---|
| CHB350-24S3V3□-X | 18-36 VDC | 3.3 VDC | 0 mA | 70 A | 140 mA | 10.94 A | 88 | 10000μF |
| CHB350-24S05□-X | 18-36 VDC | 5 VDC | 0 mA | 70 A | 260 mA | 16.39 A | 89 | 10000μF |
| CHB350-24S12□-X | 18-36 VDC | 12 VDC | 0 mA | 29.2 A | 250 mA | 16.13 A | 90.5 | 10000μF |
| CHB350-24S24□-X | 18-36 VDC | 24 VDC | 0 mA | 14.6 A | 60 mA | 16.40 A | 89 | 10000μF |
| CHB350-24S28□-X | 18-36 VDC | 28 VDC | 0 mA | 12.5 A | 60 mA | 16.11 A | 90.5 | 7000μF |
| CHB350-24S48□-X | 18-36 VDC | 48 VDC | 0 mA | 7.3 A | 60 mA | 16.22 A | 90 | 2200μF |
| CHB350-48S3V3□-X | 36-75 VDC | 3.3 VDC | 0 mA | 70 A | 90 mA | 5.41 A | 89 | 10000μF |
| CHB350-48S05□-X | 36-75 VDC | 5 VDC | 0 mA | 70 A | 130 mA | 8.01 A | 91 | 10000μF |
| CHB350-48S12□-X | 36-75 VDC | 12 VDC | 0 mA | 29.2 A | 100 mA | 7.89 A | 92.5 | 10000μF |
| CHB350-48S24□-X | 36-75 VDC | 24 VDC | 0 mA | 14.6 A | 60 mA | 7.98 A | 91.5 | 10000μF |
| CHB350-48S28□-X | 36-75 VDC | 28 VDC | 0 mA | 12.5 A | 60 mA | 7.93 A | 92 | 7000μF |
| CHB350-48S48□-X | 36-75 VDC | 48 VDC | 0 mA | 7.3 A | 60 mA | 7.93 A | 92 | 2200μF |

NOTE:
1. □= N or None, X can be L, I, C, IC
2. Nominal Input Voltage 24, 48VDC
3. The output terminal of 28Vout and 48Vout models required a minimum capacitor 100uF to maintain specified regulation.

## Remote On/Off Control

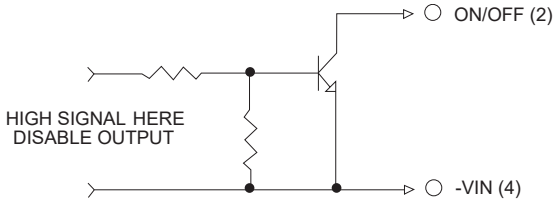


## External Output Trim

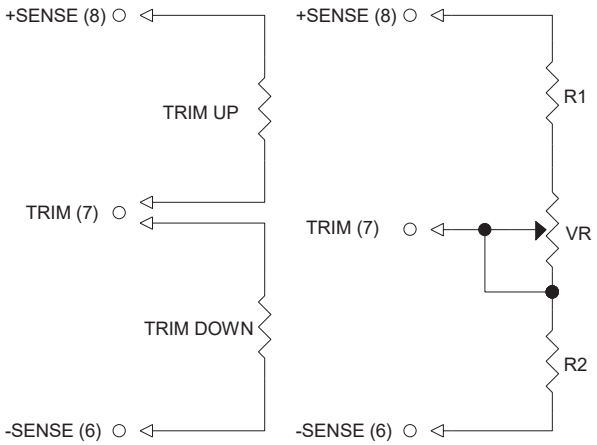


## Specifications

All Specifications Typical At Nominal Line, Full Load, and 25˚C Unless Otherwise Noted

### INPUT SPECIFICATIONS

| | | |
|---|---|---|
| Input Voltage Range | | 24V ..... 18-36V |
| | | 48V ..... 36-75V |
| Input Surge Voltage (100ms max.) | | 24V ..... 50Vdc max. |
| | | 48V .....100Vdc max. |
| Under Voltage Lockout | 24Vin | power up ..... 17V |
| | | power down ..... 16V |
| | 48Vin | power up ..... 35V |
| | | power down ..... 33V |
| Positive Logic Remote On/Off | | See note 4 |
| Logic Compatibility | | Open Collector ref to -Input |
| Module on | | >3.5Vdc to 75Vdc or Open Circuit |
| Module off | | 0 to < 1.2Vdc |
| Input Filter | | Pi Type |

### OUTPUT SPECIFICATIONS

| | |
|---|---|
| Voltage Accuracy | ±1.0% max. |
| Transient Response: 25% Step Load Change | < 500µs |
| External Trim Adj. Range (note 6) | ±10% |
| Ripple & Noise, 20MHz BW | |
| 3.3V & 5V | 40mV RMS max., 100mV pk-pk max. |
| 12V | 60mV RMS max., 120mV pk-pk max. |
| 24V & 28V | 100mV RMS max., 280mV pk-pk max. |
| 48V | 150mV RMS max., 480mV pk-pk max. |
| Temperature Coefficient | ±0.03%/°C |
| Short Circuit Protection | Continuous |
| Line Regulation (note 1) | ±0.2% max. |
| Load Regulation (note 2) | ±0.2% max. |
| Over Voltage Protection Trip Range, % Vo nom. | 115-140% |
| Current Limit | 105%-140% Nominal Output |
| Start up time | 175ms typ. |

### GENERAL SPECIFICATIONS

| | |
|---|---|
| Efficiency | See Table |
| Isolation Voltage | Input/Output ..... 1500VDC min. |
| | Input/Case ..... 1500VDC min. |
| | Output/Case ..... 1500VDC min. |
| Isolation Resistance | $10^7$ ohm min. |
| Isolation Capacitance | 2000pF typ. |
| Switching Frequency | 3V3 & 5V ..... 300KHz typ. |
| | 12V & 24V & 28V & |
| | 48V ..... 330KHz typ. |
| Operating Case Temperature | -40˚C to 100˚C |
| Storage Temperature | -55˚C to +105˚C |
| Thermal Shutdown Case Temp | 110˚C typ. |
| Humidity | 95% RH max. Non condensing |
| MTBF..... MIL-STD-217F, GB, 25˚C, Full Load | 700Khrs typ. |
| Dimensions .... Standard | 2.28 × 2.40 x 0.52 inches (57.9 x 61.0 × 13.2 mm) |
| Suffix “-IL” (note 6) | 2.28 x 2.40 x 0.50 inches (57.9 x 61.0 x 12.7mm) |
| Case Material | Aluminum Baseplate with Plastic Case |
| Weight | 114 g |

### NOTE

1. Measured from high line to low line.
2. Measured from full load to zero load.
3. Output ripple and noise measured with 10uF tantalum (for 48Vout with10uF aluminum) and 1uF ceramic capacitor across output.
4. Suffix "N" to the model number with negative logic remote On/Off
   Module On ..... 0 to < 1.2VDC
   Module Off ..... >3.5VDC to 75VDC or open circuit
5. Suffix "-C" to the model number with clear mounting Insert. (3.2mm DIA)
6. Suffix “-I” to the model number with thin input pin models (pin1 and pin4 =1.0mm).
7. Trim-up.....connect a resistor between the trim pin and +Sense
   Trim-down.....connect a resistor between the trim pin and -Sense
8. The input terminal recommend to parallel with 220µF for 48Vin and 470µF for 24Vin ESR< 0.7Ω to reduce the input ripple voltage.

# CFB200 SERIES
## 100-200 WATT

## Features

- 100W-200W Isolated Output
- Efficiency to 90%
- 2 : 1 Input Range
- 350KHz Switching Frequency
- Regulated Outputs
- Continuous Short Circuit Protection
- Industry Standard Full-Brick Package
- UL60950-1 and IEC60950-1 Approval

c UL us
E176177

## Mechanical Dimensions

NOTE:Pin Size is 0.02"Inch (0.5mm)DIA
All Dimensions in Inches (mm)
Tolerance Inches: X.XX=±0.02 , X.XXX=±0.010
Millimeters: X.X=±0.5 , X.XX=±0.25

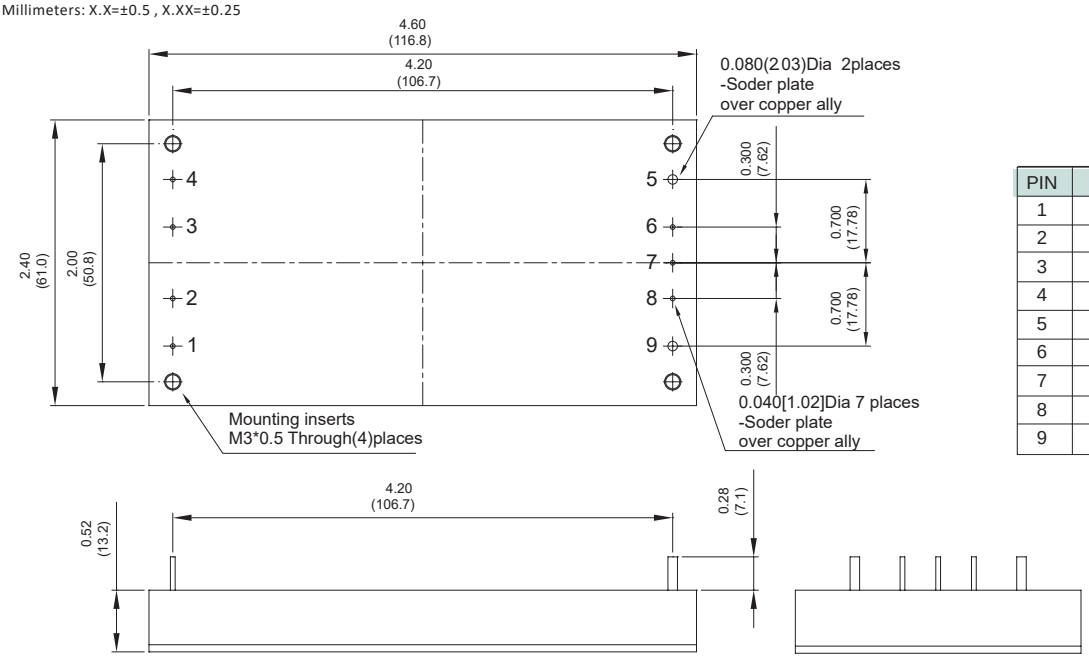


| PIN | Function |
|---|---|
| 1 | +V Input |
| 2 | On/Off |
| 3 | NC |
| 4 | -V Input |
| 5 | -V Output |
| 6 | -Sense |
| 7 | Trim |
| 8 | +Sense |
| 9 | +V Output |

| MODEL NUMBER | INPUT VOLTAGE | OUTPUT VOLTAGE | OUTPUT CURRENT | INPUT CURRENT | | % EFF. | CASE |
|---|---|---|---|---|---|---|---|
| | | | | NO LOAD | FULL LOAD | | |
| CFB200-48S25 | 36-75 VDC | 2.5 VDC | 40 A | 25 mA | 2.8 A | 74 | FB |
| CFB200-48S33 | 36-75 VDC | 3.3 VDC | 40 A | 25 mA | 3.5 A | 79 | FB |
| CFB200-48S05 | 36-75 VDC | 5 VDC | 40 A | 25 mA | 5 A | 83 | FB |
| CFB200-48S12 | 36-75 VDC | 12 VDC | 17 A | 25 mA | 5 A | 85 | FB |
| CFB200-48S15 | 36-75 VDC | 15 VDC | 13.3 A | 25 mA | 5 A | 85 | FB |
| CFB200-48S24 | 36-75 VDC | 24 VDC | 8.33 A | 25 mA | 5 A | 85 | FB |
| CFB200-48S28 | 36-75 VDC | 28 VDC | 7.14 A | 25 mA | 4.7 A | 89 | FB |
| CFB200-48S48 | 36-75 VDC | 48 VDC | 4.2 A | 25 mA | 4.7 A | 90 | FB |

NOTE: 1. Nominal Input Voltage 48VDC

## Remote On/Off Control

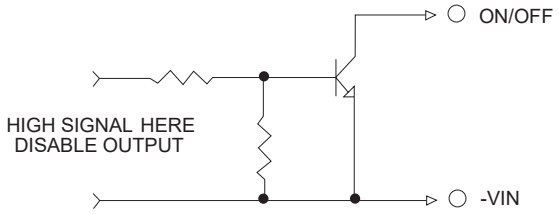


## External Output Trim

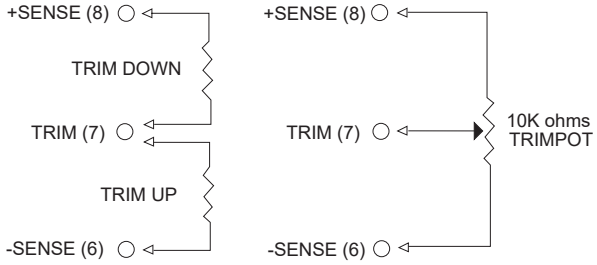


## Specifications

All Specifications Typical At Nominal Line, Full Load, and 25˚C Unless Otherwise Noted

### INPUT SPECIFICATIONS

| | |
|---|---|
| Input Voltage Range | 48V ..... 36-75V |
| Undervoltage lockout | 48Vin power up ..... 34V<br>power down ..... 32.5V |
| Positive Logic Remote On/Off | See note 3, 4 |
| Input Filter | Pi Type |

### OUTPUT SPECIFICATIONS

| | |
|---|---|
| Voltage Accuracy | ±1.0% max. |
| Transient Response 25% Step Load Change | < 500µs |
| External Trim Adj. Range | ±10% |
| Ripple and Noise, 20MHz BW, 2.5V & 3.3V & 5V | 40mV RMS. max.<br>100mV p-p max. |
| 12V & 15V | 60mV RMS. max.<br>150mV p-p max. |
| 24V & 28V & 48V | 100mV/150mV/200mV RMS. max.<br>240mV/280mV/480mV p-p max. |
| Temperature Coefficient | ±0.03%/˚C |
| Short Circuit Protection | Continuous |
| Line Regulation (note 1) | ±0.2% max. |
| Load Regulation (note 2) | ±0.2% max. |
| Over Voltage Protection trip Range, % Vo nom | 115-140% |
| Current Limit | 110%-150% Nominal Output |

### GENERAL SPECIFICATIONS

| | |
|---|---|
| Efficiency | See Table |
| Isolation Voltage | Input/Output ..... 1500 VDC min.<br>Input/Case ..... 1500 VDC min.<br>Output/Case ..... 1500 VDC min. |
| Isolation Resistance | $10^7$ ohms min. |
| Switching Frequency | 350KHz typ. |
| Operating Case Temperature | -40˚C to 100˚C |
| Storage Temperature | -40˚C to +105˚C |
| Thermal Shutdown, Case Temp. | 100˚C Typ. |
| Dimensions | 4.60 × 2.40 × 0.52 inches<br>(116.8 × 61.0 × 13.2 mm) |
| Case Material | Aluminum Baseplate with Plastic Case |
| Weight | 193 g |

### NOTE

1. Measured from high line to low line.
2. Measured from full load to zero load.
3. Logic compatibility ..... open collector Ref. to -Input
   Module On ..... Open Circuit
   Module Off ..... <0.8VDC
4. Suffix "N" to the model number with negative logic remote On/Off.

# CFB400W SERIES
## 400 WATT, 4:1 INPUT RANGE

### Features

- 400W Isolated Output
- Efficiency to 90%
- Fixed Switching Frequency
- Input Under Voltage Protection
- Over Temperature Protection
- Over Voltage/Current Protection
- Remote On/Off
- Full-Brick Size Meets Industry Standard
- Fully Isolated 1500VDC
- Without Tantalum Capacitor Inside
- UL60950-1 Approval

E176177

### Mechanical Dimensions

All Dimensions in Inches (mm)
Tolerance Inches: X.XX=±0.02 , X.XXX=±0.010
Millimeters: X.X=±0.5 , X.XX=±0.25

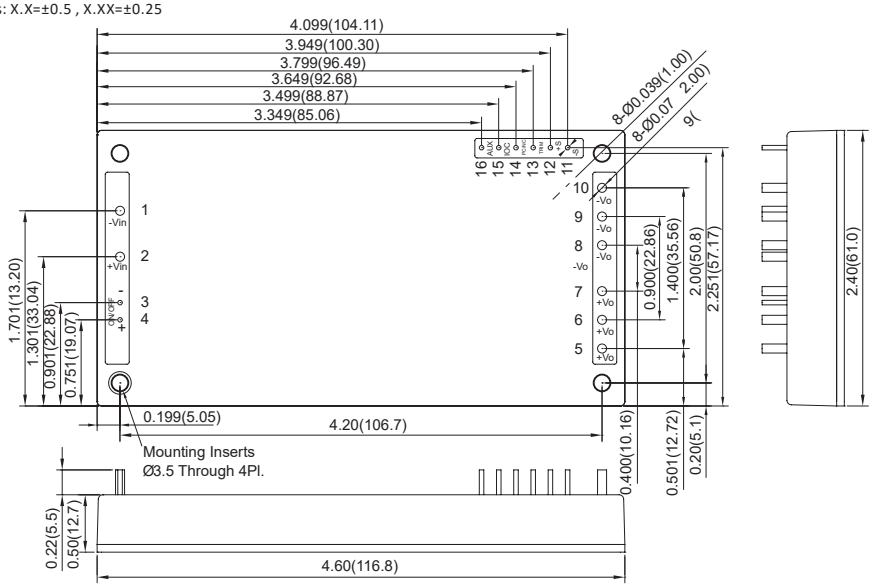


| PIN CONNECTION | |
|---|---|
| PIN | Function |
| 1 | -V Input |
| 2 | +V Input |
| 3 | -On/Off |
| 4 | +On/Off |
| 5-7 | +V Output |
| 8-10 | -V Output |
| 11 | -Sense |
| 12 | +Sense |
| 13 | Trim |
| 14 | PC/NC |
| 15 | IOG |
| 16 | AUX |

| MODEL NUMBER | INPUT VOLTAGE | OUTPUT VOLTAGE | OUTPUT CURRENT MIN. | OUTPUT CURRENT MAX. | INPUT CURRENT NO LOAD | INPUT CURRENT FULL LOAD | % EFF. (2) | % EFF. (3) | CAPACITOR LOAD MAX. (4, 5, 6) |
|---|---|---|---|---|---|---|---|---|---|
| CFB400W-24S05 | 9-36 VDC | 5 VDC | 0 mA | 80 A | 600 mA | 19.05 A | 86.5 | 87.5 | 10000µF |
| CFB400W-24S12 | 9-36 VDC | 12 VDC | 0 mA | 33.3 A | 120 mA | 19.36 A | 85 | 86 | 10000µF |
| CFB400W-24S24 | 9-36 VDC | 24 VDC | 0 mA | 16.7 A | 120 mA | 19.19 A | 88 | 87 | 4700µF |
| CFB400W-24S28 | 9-36 VDC | 28 VDC | 0 mA | 14.3 A | 120 mA | 19.18 A | 86.5 | 87 | 4700µF |
| CFB400W-24S48 | 9-36 VDC | 48 VDC | 0 mA | 8.3 A | 120 mA | 19.19 A | 85.5 | 86.5 | 2200µF |
| CFB400W-48S05 | 18-75 VDC | 5 VDC | 0 mA | 80 A | 300 mA | 9.36 A | 88.5 | 89 | 10000µF |
| CFB400W-48S12 | 18-75 VDC | 12 VDC | 0 mA | 33.3 A | 60 mA | 9.41 A | 88.5 | 88.5 | 10000µF |
| CFB400W-48S24 | 18-75 VDC | 24 VDC | 0 mA | 16.7 A | 60 mA | 9.28 A | 90 | 90 | 4700µF |
| CFB400W-48S28 | 18-75 VDC | 28 VDC | 0 mA | 14.3 A | 60 mA | 9.27 A | 90 .5 | 90 | 4700µF |
| CFB400W-48S48 | 18-75 VDC | 48 VDC | 0 mA | 8.3 A | 60 mA | 9.27 A | 88 | 89.5 | 2200µF |

NOTE:
1. Nominal Input Voltage 24, 48 VDC.
2. Measured at 12VDC for 24Vin, 24VDC for 48Vin.
3. Measured at Nominal Input Voltage.
4. The output terminal of 12V, 24V, 28V Vout models required a minimum capacitor 330uF to maintain specified regulation.
5. The output terminal of 5Vout models required a minimum capacitor 680uF to maintain specified regulation.
6. The output terminal of 48Vout models required a minimum capacitor 100uF to maintain specified regulation.

## External Output Trim

Fig.1 The schematic of output voltage adjusted by using external resistor and/or variable resistor.

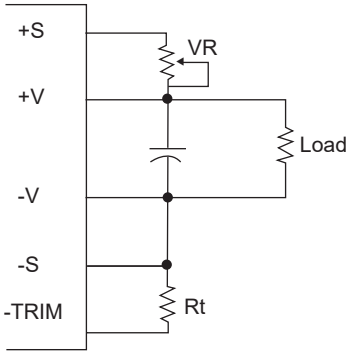


The output voltage can be determined by below equations:

$$Vf = \frac{1.24 \times (\frac{Rt \times 33}{Rt + 33})}{7.68 + \frac{Rt \times 33}{Rt + 33}}$$

$$Vout = (Vo + VR) \times Vf$$

Unit: KΩ
Vo: Nominal Output Voltage
Rt=6.8KΩ

Fig.2 The schematic of output voltage adjusted by using external DC voltage.

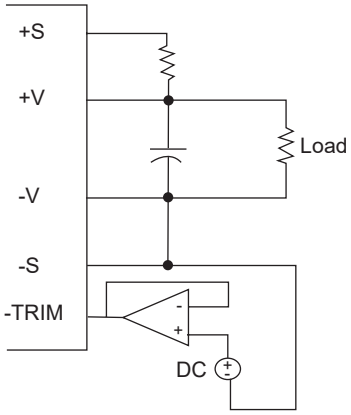


Output Voltage = TRIM Terminal Voltage * Nominal Output Voltage

## Specifications

All Specifications Typical At Nominal Line, Full Load, and 25˚C Unless Otherwise Noted

### INPUT SPECIFICATIONS

| | | |
|---|---|---|
| Input Voltage Range | | 24V ..... 9-36V |
| | | 48V ..... 18-75V |
| Under Voltage Lockout | 24Vin | power up ..... 8.5V |
| | | power down ..... 7.5V |
| | 48Vin | power up ..... 17V |
| | | power down ..... 15V |
| Input Over Voltage Protection | 24Vin | Turn off ..... 42V |
| | | Turn on ..... 40V |
| | 48Vin | Turn off ..... 83V |
| | | Turn on ..... 80V |
| Opto Isolated Remote On/Off | | See note 6 |
| Input Filter | | LC Type |

### OUTPUT SPECIFICATIONS

| | |
|---|---|
| Voltage Accuracy | ±1.0% max. |
| Transient Response: 25% Step Load Change | < 500µs |
| External Trim Adj. Range | 80-110% |
| Load share Accuracy | ±10% at 50% to 100% Full Load |
| Auxiliary Output Voltage/Current | 10±3Vdc/20mA max. |
| Ripple & Noise, 20MHz BW (note 3) | |
| 5V | 40mV RMS max., 100mV pk-pk max. |
| 12V | 60mV RMS max., 120mV pk-pk max. |
| 24V | 100mV RMS max., 240mV pk-pk max. |
| 28V | 100mV RMS max., 280mV pk-pk max. |
| 48V | 120mV RMS max., 480mV pk-pk max. |
| Temperature Coefficient | ±0.03%/°C |
| Short Circuit Protection | Continuous |
| Line Regulation (note 1) | ±0.2% max. |
| Load Regulation (note 2) | ±0.5% max. |
| Over Voltage Protection Trip Range, % Vo nom. | 115-140% |
| Current Limit | 110% -150% Nominal Output |
| Start up time | 120ms typ. |

### GENERAL SPECIFICATIONS

| | |
|---|---|
| Efficiency | See Table |
| Isolation Voltage | Input/Output .....1500VDC min. |
| | Input/Case ..... 1500VDC min. |
| | Output/Case ..... 1500VDC min. |
| Isolation Resistance | $10^7$ ohm min. |
| Isolation Capacitance | 4000pF typ. |
| Switching Frequency | 230KHz typ. |
| Operating Case Temperature | -40˚C to 100˚C |
| Storage Temperature | -55˚C to +110˚C |
| Thermal Shutdown Case Temp. | 110˚C typ. |
| Humidity | 95% RH max. Non condensing |
| MTBF ..... MIL-HDBK-217F, GB, 25˚C , Full Load | 340Khrs typ. |
| Dimensions | 4.60 × 2.40 x 0.50 inches (116.8 x 61.0 × 12.7 mm) |
| Case Material | Aluminum Baseplate with Plastic Case |
| Weight | 220 g |

### NOTE

1. Measured from high line to low line.
2. Measured from full load to zero load.
3. Output ripple and noise measured with 10µF tantalum and 1µF ceramic capacitor across output.
4. The output adjustment circuit and trim equations show as figure1 and figure2.
5. An external input capacitor 1000µF for 24Vin or 330µF for 48Vin models are recommended to reduce input ripple voltage.
6. Standard model is negative logic , suffix "P" to the model number with positive logic. (refer application note)
7. If the remote sense feature is not to be used, the +sense pin should be connected to the +Vout pin and the –sense pin should be connected to the -Vout pin. (refer application note)

# CFB600 SERIES
## 600-700 WATT, 2:1 INPUT RANGE

### Features

- 600W-700W Isolated Output
- Efficiency to 92%
- Fixed Switching Frequency
- Input Under-Voltage Protection
- Over Temperature Protection
- Over Voltage/Current Protection
- Remote On/Off
- Industry Full-Brick Package
- Fully Isolated 1500VDC
- UL60950-1 Approval

E176177

### Mechanical Dimensions

All Dimensions in Inches (mm)
Tolerance Inches: X.XX=±0.02 , X.XXX=±0.010
Millimeters: X.X=±0.5 , X.XX=±0.25

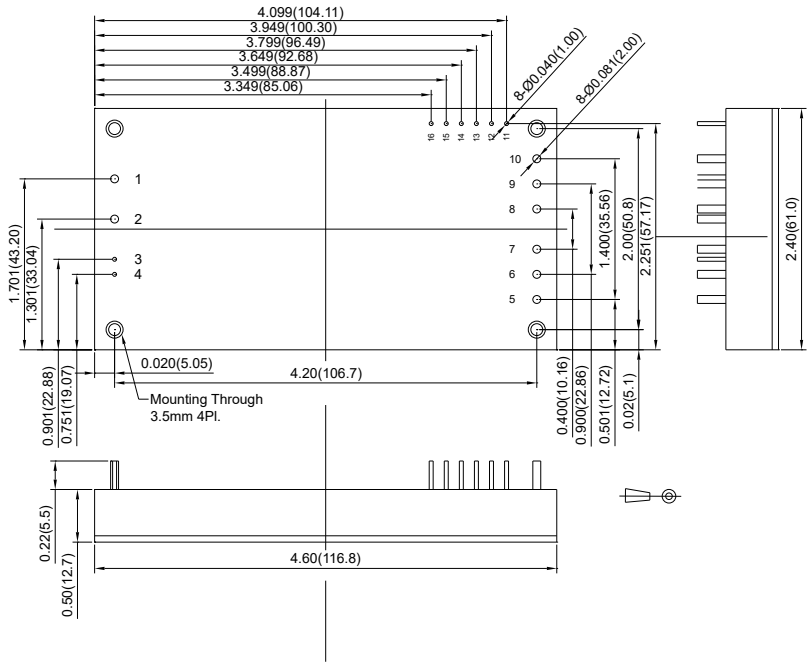


| PIN CONNECTION | |
|---|---|
| PIN | Function |
| 1 | -V Input |
| 2 | +V Input |
| 3 | -On/Off |
| 4 | +On/Off |
| 5-7 | +V Output |
| 8-10 | -V Output |
| 11 | -Sense |
| 12 | +Sense |
| 13 | Trim |
| 14 | PC/NC |
| 15 | IOG |
| 16 | AUX |

| MODEL NUMBER | INPUT VOLTAGE | OUTPUT VOLTAGE | OUTPUT CURRENT MIN. | OUTPUT CURRENT MAX. | INPUT CURRENT NO LOAD | INPUT CURRENT FULL LOAD | % EFF. | CAPACITOR LOAD MAX. |
|---|---|---|---|---|---|---|---|---|
| CFB600-24S12 | 18-36 VDC | 12 VDC | 0 mA | 50 A | 150 mA | 28.09 A | 88 | 10000μF(2) |
| CFB600-24S24 | 18-36 VDC | 24 VDC | 0 mA | 25 A | 150 mA | 27.78 A | 89 | 5000μF(2) |
| CFB600-24S28 | 18-36 VDC | 28 VDC | 0 mA | 21.5 A | 150 mA | 27.87 A | 90 | 5000μF(2) |
| CFB600-24S32 | 18-36 VDC | 32 VDC | 0 mA | 19 A | 150 mA | 27.84 A | 91 | 5000μF(2) |
| CFB600-24S48 | 18-36 VDC | 48 VDC | 0 mA | 12.5 A | 200 mA | 27.47 A | 91 | 5000μF(2) |
| CFB600-48S12 | 36-75 VDC | 12 VDC | 0 mA | 50 A | 90 mA | 13.89 A | 90 | 10000μF(2) |
| CFB600-48S24 | 36-75 VDC | 24 VDC | 0 mA | 25 A | 100 mA | 13.59 A | 92 | 5000μF(2) |
| CFB700-48S28 | 36-75 VDC | 28 VDC | 0 mA | 25 A | 105 mA | 16.03 A | 91 | 5000μF(2) |
| CFB600-48S32 | 36-75 VDC | 32 VDC | 0 mA | 19 A | 90 mA | 13.77 A | 92 | 5000μF(2) |
| CFB600-48S48 | 36-75 VDC | 48 VDC | 0 mA | 12.5 A | 130 mA | 13.59 A | 92 | 5000μF(2) |

NOTE:
1. Nominal Input Voltage 24, 48 VDC
2. The output terminal of all models required a minimum capacitor 470uF to maintain specified regulation.

## External Output Trim

Fig.1 The schematic of output voltage adjusted by using external resistor and/or variable resistor.

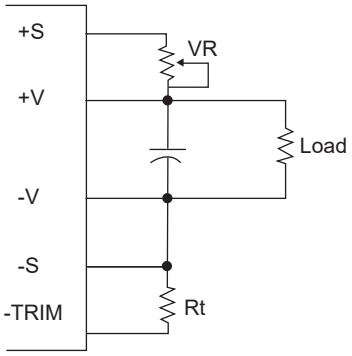


The output voltage can be determined by below equations:

$$Vf = \frac{1.24 \times (\frac{Rt \times 33}{Rt + 33})}{7.68 + \frac{Rt \times 33}{Rt + 33}}$$

$$Vout = (Vo + VR) \times Vf$$

Unit: KΩ
Vo: Nominal Output Voltage
Rt=6.8KΩ

Fig.2 The schematic of output voltage adjusted by using external DC voltage.

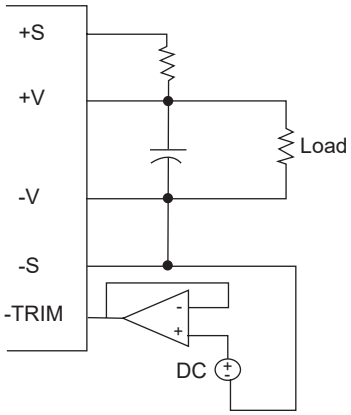


Output Voltage = TRIM Terminal Voltage * Nominal Output Voltage

## Specifications

All Specifications Typical At Nominal Line, Full Load, and 25˚C Unless Otherwise Noted

### INPUT SPECIFICATIONS

| | | |
|---|---|---|
| Input Voltage Range | | 24V ..... 18-36V |
| | | 48V ..... 36-75V |
| Input Surge Voltage (100ms max.) | | 24V ..... 50Vdc max. |
| | | 48V ..... 100Vdc max. |
| Under voltage lockout | 24Vin | power up ..... 17V |
| | | power down ..... 16V |
| | 48Vin | power up .....35V |
| | | power down ..... 33V |
| Input over voltage protection | 24Vin | Turn off ..... 40V |
| | | Turn on ..... 38V |
| | 48Vin | Turn off ..... 80V |
| | | Turn on ..... 77V |
| Opto isolated Remote On/Off | | See note 6 |
| Input Filter(note 7) | | PI Type |

### OUTPUT SPECIFICATIONS

| | |
|---|---|
| Voltage Accuracy | ±1.0% max. |
| Transient Response:25% Step Load Change | < 500µs |
| External Trim Adj. Range | 60-110%% |
| Load share Accuracy | ±10% at 50% to 100% Full Load |
| Auxiliary output voltage/current | 10±3Vdc/20mA max. |
| Ripple & Noise, 20MHz BW | |
| 12V | 60mV RMS max., 120mV pk-pk max. |
| 24V | 100mV RMS max., 240mV pk-pk max. |
| 28V | 100mV RMS max., 280mV pk-pk max. |
| 32V | 120mV RMS max., 320mV pk-pk max. |
| 48V | 200mV RMS max., 480mV pk-pk max |
| Temperature Coefficient | ±0.03%/°C |
| Short Circuit Protection | Continuous |
| Line Regulation (note 1) | ±0.2% max. |
| Load Regulation (note 2) | ±0.5% max. |
| Over Voltage Protection trip Range,% Vo nom. | 115-140% |
| Current Limit | 110% -150% Nominal Output |
| Start up time | 160ms typ. |

### GENERAL SPECIFICATIONS

| | |
|---|---|
| Efficiency | See Table |
| Isolation Voltage | Input/Output ..... 1500VDC min. |
| | Input/Case .....1500VDC min. |
| | Output/Case ..... 1500VDC min. |
| Isolation Resistance | $10^7$ ohm min. |
| Isolation Capacitance | 4000pF typ. |
| Switching Frequency | 48S12 & 48S28 & 48S32...300KHz typ. |
| | Others ..... 250KHz typ. |
| Operating Case Temperature | -40˚C to 100˚C |
| Storage Temperature | -55˚C to +105˚C |
| Thermal Shutdown, Case Temp. | 110˚C typ. |
| Humidity | 95% RH max. Non condensing |
| MTBF ..... MIL-STD-217F, GB, 25˚C, Full Load | 450Khrs typ. |
| Dimensions | 4.60 × 2.40 x 0.50 inches (116.8 x 61.0 × 12.7 mm) |
| Case Material | Aluminum Baseplate with Plastic Case |
| Weight | 220 g |

### NOTE

1. Measured from high line to low line.
2. Measured from full load to zero load.
3. Output ripple and noise measured with 10µF tantalum and 1µF ceramic capacitor across output.
4. The output adjustment circuit and trim equations show as figure1 and figure2.
5. An external input capacitor 220µF for all models are recommended to reduce input ripple voltage.
6. Standard model is negative logic, suffix "P" to the model number with positive logic. (refer application note)
7. If the remote sense feature is not to be used, the +sense pin should be connected to the +Vout pin and the –sense pin should be connected to the -Vout pin. (refer application note Item 6.9)

# CFB600W-110S SERIES
## 600 WATT DC-DC CONVERTERS

### Features

- 600W Isolated Output
- Efficiency to 88%
- Regulated Outputs
- Isolated Remote On/Off
- Over Temperature Protection
- Over Voltage/Current Protection
- Continuous Short Circuit Protection
- Full-Brick Size Meet Industry Standard
- Meet EN50155 with External Circuits
- Shock & Vibration Meet EN50155 (EN61373)
- Meet UL60950-1 2nd (Basic Insulation)
- Fire & Smoke Meet EN45545-2

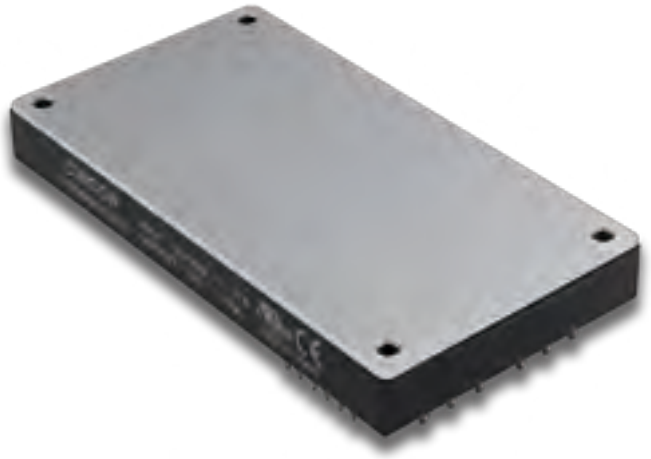

### Mechanical Dimensions

All Dimensions in Inches[mm] Pin
Tolerance Inches:x.xx=±0.02 , x.xxx=±0.01 ±0.004
Millimeters:x.x=±0.5 , x.xx=±0.25 ±0.1

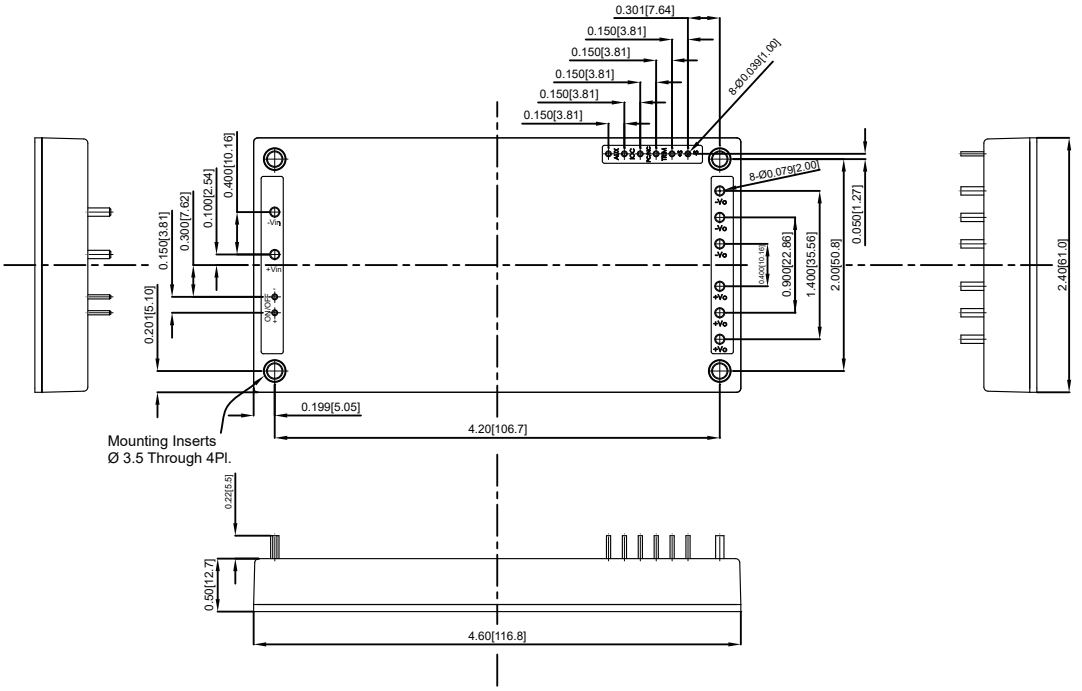


| PIN CONNECTION | |
|---|---|
| PIN NUMBER | CONNECTION |
| 1 | -V Input |
| 2 | +V Input |
| 3 | -On/Off |
| 4 | +On/Off |
| 5~7 | +V Output |
| 8~10 | -V Output |
| 11 | -Sense |
| 12 | +Sense |
| 13 | TRIM |
| 14 | PC |
| 15 | IOC |
| 16 | AUX |

| MODEL NUMBER | INPUT VOLTAGE | OUTPUT VOLTAGE | OUTPUT CURRENT MIN. | OUTPUT CURRENT MAX. | INPUT CURRENT NO LOAD | INPUT CURRENT FULL LOAD | % EFF. (3) | CAPACITOR LOAD MAX. |
|---|---|---|---|---|---|---|---|---|
| CFB600W-110S12 | 43-160 VDC | 12 VDC | 0 mA | 50 A | 25 mA | 6.3 A | 87 | 10000µF |
| CFB600W-110S24 | 43-160 VDC | 24 VDC | 0 mA | 25 A | 25 mA | 6.2 A | 88 | 10000µF |
| CFB600W-110S28 | 43-160 VDC | 28 VDC | 0 mA | 21.4 A | 25 mA | 6.2 A | 88 | 10000µF |
| CFB600W-110S48 | 43-160 VDC | 48 VDC | 0 mA | 12.5 A | 25 mA | 6.2 A | 88 | 10000µF |

NOTE:
1. Nominal Input Voltage 110 VDC.
2. The Output Terminal Required a Minimum Capacitor 470uF to Maintain Specified Regulation.
3. Measure at Nominal Input Voltage.

## Specifications

All Specifications Typical At Nominal Line, Full Load, and 25˚C Unless Otherwise Noted

### INPUT SPECIFICATIONS

| | |
|---|---|
| Input Voltage Range | 110V ..... 43-160V |
| Input Surge Voltage (100ms max.) | 180Vdc max. |
| Under voltage lockout | power up ..... 42V |
| | power down ..... 40V |
| Opto Isolated Remote On/Off | See note 8 |
| Input Filter | PI Type |

### OUTPUT SPECIFICATIONS

| | |
|---|---|
| Voltage Accuracy: | ±1.0% max. |
| Transient Response: 25% Step Load Change | <500µs |
| External Trim Adj. Range | 60%, +110% |
| Ripple & Noise, 20MHz BW ( see note 3) | |
| 12V | 60mV RMS, 120mV pk-pk max. |
| 24V | 100mV RMS, 240mV pk-pk max. |
| 28V | 100mV RMS, 280mV pk-pk max. |
| 48V | 200mV RMS, 480mV pk-pk max. |
| Temperature Coefficient | ±0.03%/°C |
| Short Circuit Protection | Continuous |
| Line Regulation (note 1) | ±0.2% max. |
| Load Regulation (note 2) | ±0.5% max. |
| Over Voltage Protection trip Range, % Vo nom. | 115-140% |
| Current Limit | 105%-140% Nominal Output |
| Auxiliary Output Voltage/Current | 10±3Vdc/20mA max. |
| Start up time | 160ms typ. |

### GENERAL SPECIFICATIONS

| | |
|---|---|
| Efficiency | See Table |
| Isolation Voltage | Input/Output ..... 2250VDC min. |
| | Input/Case ..... 2250VDC min. |
| | Output/Case ..... 1500VDC min. |
| Isolation Resistance | $10^7$ ohm min. |
| Isolation Capacitance | 4000pF typ |
| Switching Frequency | 250KHz typ. |
| Operating Case Temperature | -40˚C to 100˚C |
| Storage Temperature | -55˚C to +105˚C |
| Thermal Shutdown, Case Temp. | 110˚C typ. |
| Humidity | 95% RH max. Non condensing |
| Operating Altitude | 2000m |
| MTBF ... MIL-STD-217F, GB, 25˚C, Full Load | 450Khrs typ. |
| Safety | UL60950-1 2nd(Basic insulation) |
| EMC (note 5) | EN50155(EN50121-3-2) |
| | with External Flter |
| Shock/Vibration | EN50155 (EN61373) |
| Environmental | EN50155 (EN60068-2-1) |
| Dimensions | 4.60×2.40x0.50 inches |
| | (116.8x61.0x12.7 mm) |
| Case Material | Aluminum Baseplate with Plastic Case |
| Weight | 220 g |

### NOTE

1. Measured from high line to low line.
2. Measured from full load to zero load.
3. Output ripple and noise measured with 10uF tantalum capacitor and 1uF ceramic capacitor across output.(48Vo: 10uF aluminum capacitor and 1.0uF ceramic capacitors)
4. An external input capacitor 220uF for all models are recommended to reduce input ripple voltage.
5. For information about EN50155 and RIA12, refer to application note.
6. Trim-up: connect a resistor between trim pin and +sense.
   Trim-down: connect a resistor between trim pin and –sense.
7. Suffix "-C0" to the model number with threaded mounting holes (M3x0.5).
8. Standard model is negative logic, suffix "P" to the model number with positive logic. (refer application note)

# CFB600-300S SERIES
## 600 WATT, INPUT RANGE 180-425 VDC

### Features

- 600W Isolated Output
- Efficiency to 91%
- Fixed Switching Frequency
- Input Under-Voltage Protection
- Over Temperature Protection
- Over Voltage/Current Protection
- Remote On/Off
- Single Wire Parallel
- Industry Full-Brick Package
- UL 60950-1 Approval
- Fully Isolated 3000VAC

E176177

### Mechanical Dimensions

All Dimensions in Inches (mm)
Tolerance Inches: X.XX=±0.02 , X.XXX=±0.010
Millimeters: X.X=±0.5 , X.XX=±0.25

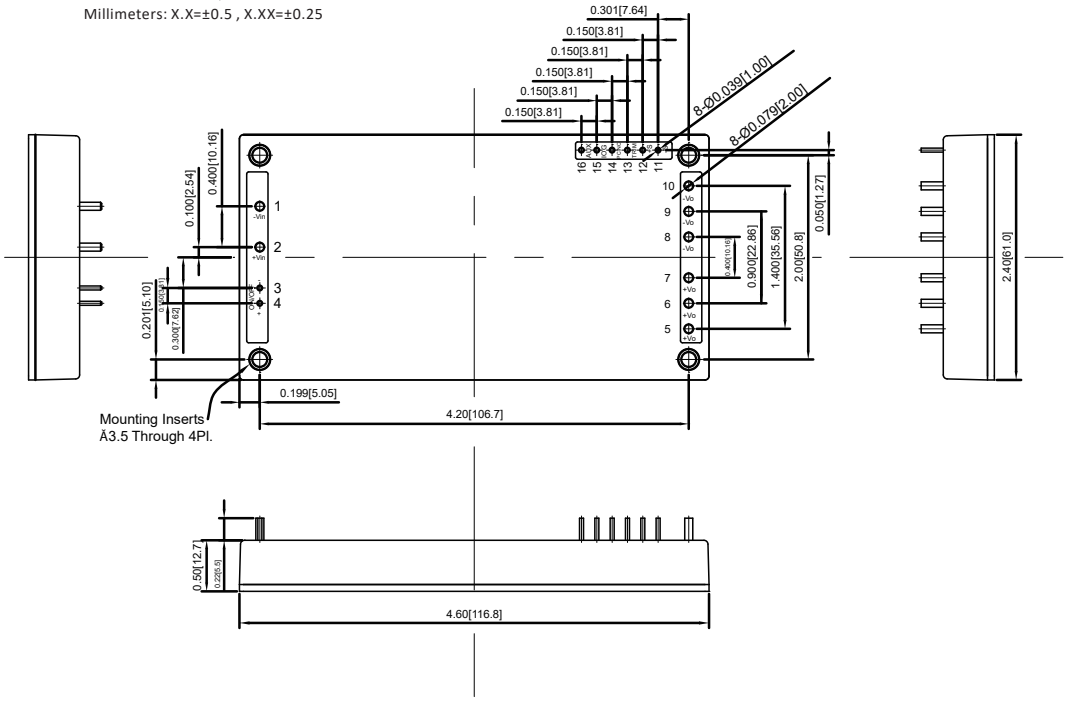


| PIN CONNECTION | |
|---|---|
| PIN | Function |
| 1 | -V Input |
| 2 | +V Input |
| 3 | -On/Off |
| 4 | +On/Off |
| 5-7 | +V Output |
| 8-10 | -V Output |
| 11 | -Sense |
| 12 | +Sense |
| 13 | Trim |
| 14 | PC/NC |
| 15 | IOG |
| 16 | AUX |

| MODEL NUMBER | INPUT VOLTAGE | OUTPUT VOLTAGE | OUTPUT CURRENT MIN. | OUTPUT CURRENT MAX. | INPUT CURRENT NO LOAD | INPUT CURRENT FULL LOAD | % EFF. | CAPACITOR LOAD MAX. |
|---|---|---|---|---|---|---|---|---|
| CFB600-300S12 | 180-425 VDC | 12 VDC | 0 mA | 50 A | 10 mA | 2.24 A | 89.5 | 10000µF |
| CFB600-300S24 | 180-425 VDC | 24 VDC | 0 mA | 25 A | 10 mA | 2.21 A | 90.5 | 10000µF |
| CFB600-300S48 | 180-425 VDC | 48 VDC | 0 mA | 12.5 A | 10 mA | 2.20 A | 91 | 8000µF |

NOTE:
1. Nominal Input Voltage 300 VDC.
2. The output terminal required a minimum capacitor 470uF to maintain specified regulation.
3. Measure at Nominal Input Voltage.

## External Output Trim

Fig.1 The schematic of output voltage adjusted by using external resistor and/or variable resistor.

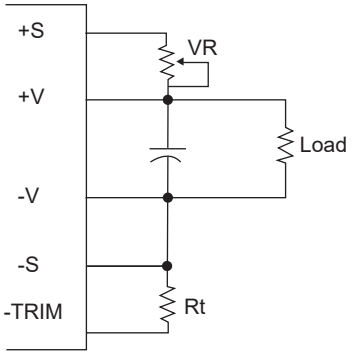


The output voltage can be determined by below equations:

$$Vf = \frac{1.24 \times (\frac{Rt \times 33}{Rt + 33})}{7.68 + \frac{Rt \times 33}{Rt + 33}}$$

$$Vout = (Vo + VR) \times Vf$$

Unit: KΩ
Vo: Nominal Output Voltage
Rt=6.8KΩ

Fig.2 The schematic of output voltage adjusted by using external DC voltage.

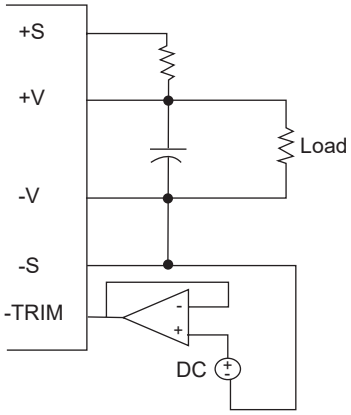


Output Voltage = TRIM Terminal Voltage * Nominal Output Voltage

## Specifications

All Specifications Typical At Nominal Line, Full Load, and 25˚C Unless Otherwise Noted

### INPUT SPECIFICATIONS

| | |
|---|---|
| Input Voltage Range | 300V ..... 180-425V |
| Input Over Voltage Protection | Module on ..... 480V |
| | Module off ..... 500V |
| Under Voltage Lockout | 300Vin Power Up .....170V |
| | Power Down .....160V |
| Positive Logic Remote On/Off | See note 5 & 6 |
| Input Filter(note 7) | Capacitive |

### OUTPUT SPECIFICATIONS

| | |
|---|---|
| Voltage Accuracy | ±1.0% max. |
| Transient Response:25% Step Load Change | < 500µs |
| External Trim Adj. Range (note 4) | 60-110%% |
| Load share Accuracy | ±10% at 50% to 100%Full Load |
| Auxiliary Output Voltage/Current | 10±3Vdc/20mA max. |
| Ripple & Noise, 20MHz BW (note 3) | |
| 12V | 75mV RMS max., 150mV pk-pk max. |
| 24V | 120mV RMS max., 240mV pk-pk max. |
| 48V | 200mV RMS max., 480mV pk-pk max. |
| Temperature Coefficient | ±0.03%/°C |
| Short Circuit Protection | Continuous |
| Line Regulation (note 1) | ±0.2% max. |
| Load Regulation (note 2) | ±0.5% max. |
| Over Voltage Protection Trip Range, % Vo nom | 115-140% |
| Current Limit | 105% -125% Nominal Output |
| Start up time | 40ms typ. |

### GENERAL SPECIFICATIONS

| | |
|---|---|
| Efficiency | See Table |
| Isolation Voltage | Input/Output .....3000VAC min. |
| | Input/Case ..... 2500VAC min. |
| | Output/Case .....500VAC min. |
| Isolation Resistance | $10^7$ ohm min. |
| Switching Frequency | 200KHz typ. |
| Operating Case Temperature Storage | -40˚C to 100˚C |
| Temperature | -55˚C to +105˚C |
| Thermal Shutdown, Case Temp. | 105˚C typ. |
| Humidity | 95% RH max. Non condensing |
| MTBF ..... MIL-STD-217F, GB, 25˚C, Full Load | 420Khrs typ. |
| Dimensions | 4.60 × 2.40 x 0.50 inches (116.8 x 61.0 x 12.7 mm) |
| Case Material | Aluminum Baseplate with Plastic Case |
| Weight | 230 g typ. |

### NOTE

1. Measured from high line to low line.
2. Measured from full load to zero load.
3. Output ripple and noise measured with min. capacitor 470µF and 1µF ceramic capacitor across output.
4. The output adjustment circuit and trim equations show as figure1 and figure2.
5. Logic compatibility ..... open collector refer to -Vin
   Module On ..... >3.5VDC to 75VDC or open circuit
   Module Off ..... 0 to <1.2Vdc
6. Suffix "N" to the model number with negative logic remote On/Off
   Module On ..... 0 to <1.2Vdc
   Module Off ..... >3.5VDC to 75VDC or open circuit
7. An external input capacitor 330µF for all models are recommended to reduce input ripple voltage.

# CFB750-300S SERIES
## 750 WATT 2:1 INPUT DC-DC CONVERTERS

### Features

- 750W Isolated Output
- Efficiency to 90%
- Fixed Switching Frequency
- Input Under-Voltage Protection
- Over Temperature Protection
- Over Voltage/Current Protection
- Remote On/Off
- Industry Full-Brick Package
- Single Wire Parallel
- Meets UL 60950-1
- Fully Isolated 3000VAC

### Mechanical Dimensions

All Dimensions in Inches[mm] Pin
Tolerance Inches:x.xx=±0.02 , x.xxx=±0.01 ±0.004
Millimeters:x.x=±0.5 , x.xx=±0.25 ±0.1

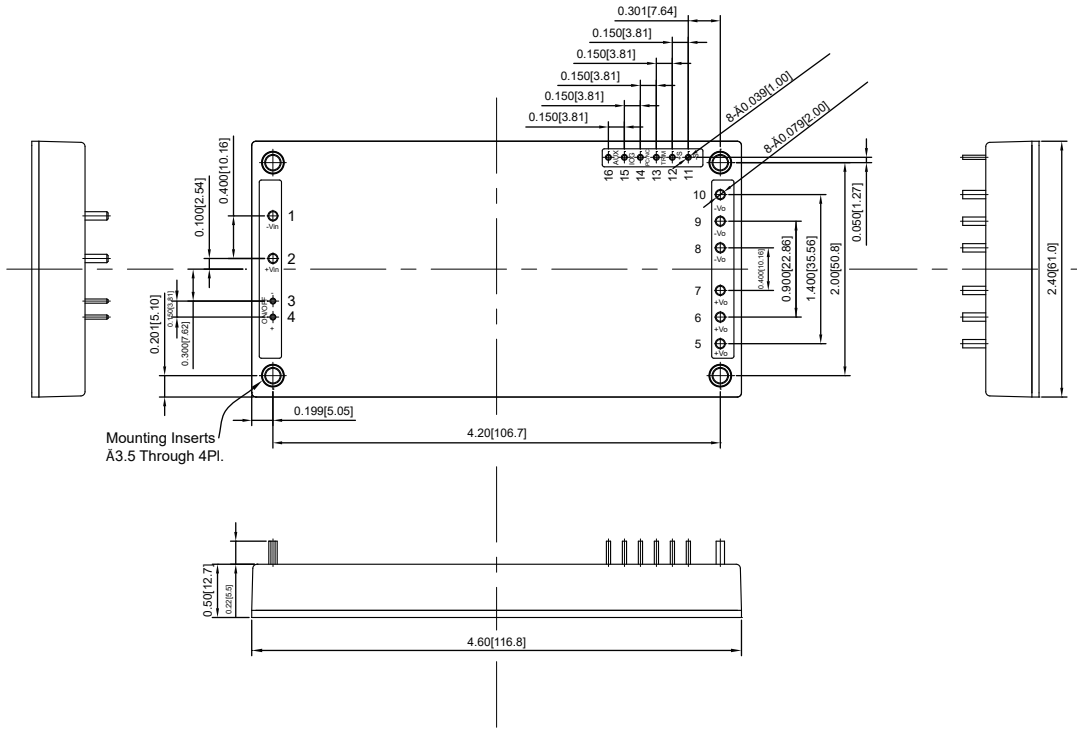


| PIN CONNECTION | |
|---|---|
| PIN NUMBER | CONNECTION |
| 1 | -V Input |
| 2 | +V Input |
| 3 | -On/Off |
| 4 | +On/Off |
| 5~7 | +V Output |
| 8~10 | -V Output |
| 11 | -Sense |
| 12 | +Sense |
| 13 | TRIM |
| 14 | PC |
| 15 | IOG |
| 16 | AUX |

| MODEL NUMBER | INPUT VOLTAGE | OUTPUT VOLTAGE | OUTPUT CURRENT MIN. | OUTPUT CURRENT MAX. | INPUT CURRENT NO LOAD | INPUT CURRENT FULL LOAD | % EFF. | CAPACITOR LOAD MAX. |
|---|---|---|---|---|---|---|---|---|
| CFB750-300S12 | 200-425VDC | 12 VDC | 0 mA | 62.5 A | 10 mA | 2.84 A | 88 | 10000µF |
| CFB750-300S15 | 200-425VDC | 15 VDC | 0 mA | 50 A | 10 mA | 2.84 A | 88 | 10000µF |
| CFB750-300S24 | 200-425VDC | 24 VDC | 0 mA | 31.2 A | 10 mA | 2.78 A | 90 | 10000µF |
| CFB750-300S28 | 200-425VDC | 28 VDC | 0 mA | 26.7 A | 10 mA | 2.78 A | 90 | 10000µF |
| CFB750-300S36 | 200-425VDC | 36 VDC | 0 mA | 20.8 A | 10 mA | 2.78 A | 90 | 8000µF |
| CFB750-300S48 | 200-425VDC | 48 VDC | 0 mA | 15.6 A | 10 mA | 2.78 A | 90 | 8000µF |

NOTE:
1. Nominal input voltage 300 VDC
2. The output terminal required a minimum capacitor 1000uF to maintain specified regulation.
3. Measure at nominal input voltage

## External Output Trim

Fig.1 The schematic of output voltage adjusted by using external resistor and/or variable resistor.

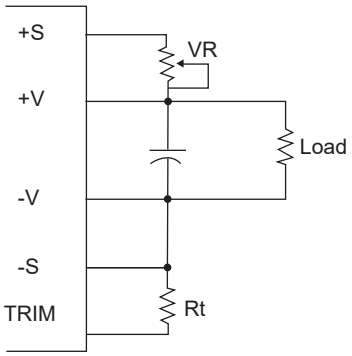


The output voltage can be determined by below equations:

$$Vf = \frac{1.24 \times (\frac{Rt \times 33}{Rt + 33})}{7.68 + \frac{Rt \times 33}{Rt + 33}}$$

$$Vout = (Vo + VR) \times Vf$$

Unit: KΩ
Vo: Nominal Output Voltage

Fig.2 The schematic of output voltage adjusted by using external DC voltage.

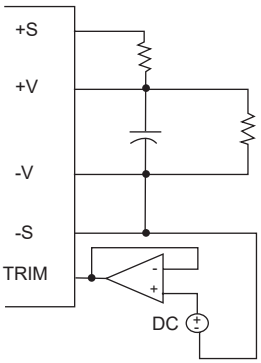


Output Voltage = TRIM Terminal Voltage * Nominal Output Voltage

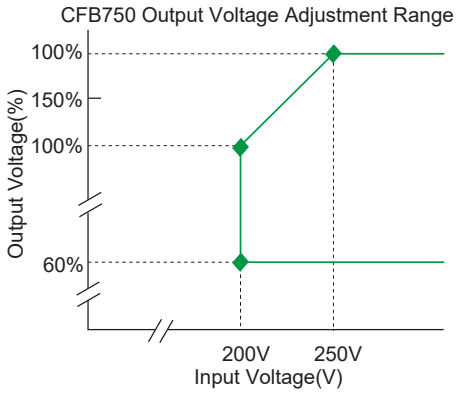


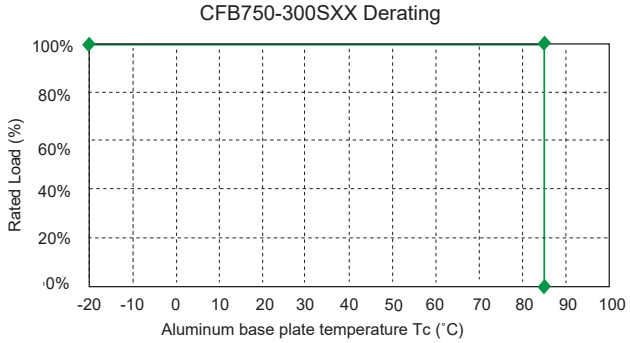


## Specifications

All Specifications Typical At Nominal Line, Full Load, and 25˚C Unless Otherwise Noted

### INPUT SPECIFICATIONS

| | |
|---|---|
| Input Voltage Range | 300V ..... 200-425V |
| Input Over Voltage Protection | Module on .....480V |
| | Module off .....500V |
| Under voltage lockout | 300Vin power up .....195V |
| | 300Vin power down ....180V |
| Positive Logic Remote On/Off (note5&6) | |
| Input Filter (note 7) | C Type |

### OUTPUT SPECIFICATIONS

| | |
|---|---|
| Voltage Accuracy | ±1.0% max. |
| Transient Response: 25% Step Load Change | <500µs |
| External Trim Adj. Range(note 4) | 60%-110% |
| Ripple & Noise, 20MHz BW ( see note 3) | |
| 12V&15V | 150mV RMS, 300mV pk-pk max. |
| 24V&28V | 300mV RMS, 600mV pk-pk max. |
| 36V | 300mV RMS, 650mV pk-pk max. |
| 48V | 350mV RMS, 750mV pk-pk max. |
| Temperature Coefficient | ±0.03%/°C |
| Short Circuit Protection | Continuous |
| Line Regulation (note 1) | ±0.2% max. |
| Load Regulation (note 2) | ±0.5% max. |
| Over Voltage Protection trip Range, % Vo nom. | 115-140% |
| Current Limit | 105%-125% Nominal Output |

### GENERAL SPECIFICATIONS

| | |
|---|---|
| Efficiency | See Table |
| Isolation Voltage | Input/Output ..... 3000VAC min. |
| | Input/Case ..... 2500VAC min. |
| | Output/Case ..... 500VAC min. |
| Isolation Resistance | $10^7$ ohm min. |
| Switching Frequency | 200KHz typ. |
| Operating Case Temperature | -40˚C to 85˚C |
| Storage Temperature | -55˚C to +105˚C |
| Thermal Shutdown, Case Temp. | 95˚C typ. |
| Humidity | 95% RH max. Non condensing |
| MTBF ... MIL-STD-217F, GB | 370Khrs typ. |
| Dimensions | 4.60×2.40x0.50 inches |
| | (116.8x61.0x12.7 mm) |
| Case Material | Aluminum Baseplate with Plastic Case |
| Weight | 230g typ. |

### NOTE

1. Measured from high line to low line.
2. Measured from full load to zero load.
3. Output ripple and noise measured with 1uF ceramic capacitor and 1000uF aluminum capacitor across output.
4. The output adjustment circuit and trim equations show as Figure1 and Figure2.
5. Logic compatibility.....open collector refer to -Vin
   Module on .....>3.5Vdc to 75Vdc or Open Circuit
   Module off .....0 to <1.2Vdc
6. Suffix "N" to the model number with negative logic remote on/off
   Module on .....0 to <1.2Vdc
   Module off ..... >3.5Vdc to 75Vdc or Open Circuit

# CQB CHASSIS MOUNT/DIN-RAIL
## 33-100W, WIDE INPUT RANGE

### Features

- 33W-100W Isolated Output
- 4 : 1 Wide Input Range
- Chassis Mount/Din Rail Mount
- Input Over Voltage Protection
- Regulated Outputs
- Continuous Short Circuit Protection
- Safety Meets UL60950-1, EN60950-1, and IEC60950-1
- UL60950-1 Approval for DC Modules

E176177

**QUARTER BRICK DC-DC CONVERTER WITH HEATSINK**

### Mechanical Dimensions

All Dimensions in Inches (mm)
Tolerance Inches: X.XX=±0.02 , X.XXX=±0.010
Millimeters: X.X=±0.5 , X.XX=±0.25

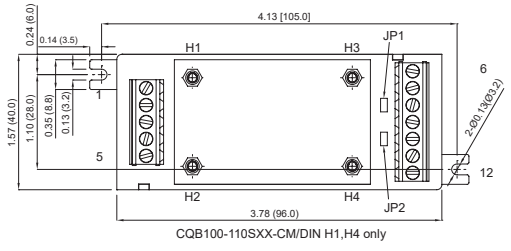

CQB100-110SXX-CM/DIN H1,H4 only

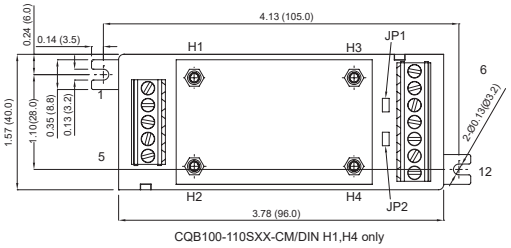

CQB100-110SXX-CM/DIN H1,H4 only

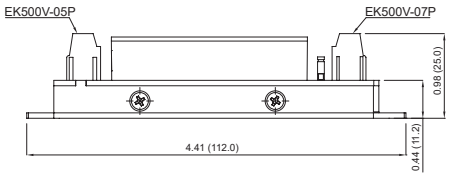


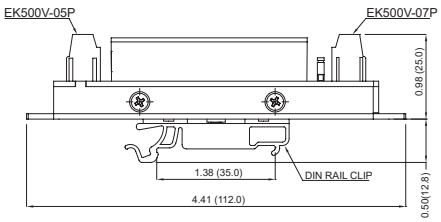


| PIN CONNECTION | |
|---|---|
| PIN | Function |
| 1,2 | +V Input |
| 3 | On/Off |
| 4,5 | -V Input |
| 6,7 | +V Output |
| 8 | +Sense |
| 9 | Trim |
| 10 | -Sense |
| 11,12 | -V Output |
| JP1 | Short +S& +V Output |
| JP2 | Short -S& -V Output |

| MODEL NUMBER | INPUT |
|---|---|
| CQE50W-XXSXX-CM/DIN | 220µF/100V for 24Vin Models<br>47µF/100V for 48Vin Models |
| CQB75W-XXSXX-CM/DIN | 220µF/100V for 24Vin Models |
| CQB100W-XXSXX-CM/DIN | 100µF/100V for 24Vin Models<br>47µF/100V for 48Vin Models |
| CQB100-110SXX-CM/DIN | 120µF/200V |
| CQB150W-XXSXX-CM/DIN | 470uF/50V for 24Vin Models<br>220uF/100V for 48Vin Models<br>220uF/200V for 110Vin Models |

NOTE:
1. Short JP1 to connect +S and +Vo, JP2 to connect –S and –Vo with local sense.
2. Remove jumper(JP1& JP2),terminal block port +S, -S & Trim can be used to output remote sensing or output voltage adjustment functional(see application note).
3. Thermal resistance is referenced to the application note.
4. Include TVS for input surge voltage protection.
5. Recommend external fuse for input reverse polarity protection (Include shunt diode inside).
6. Suffix “DIN” to the model number with din mount, the clip is suitable f

## Derating Curve

### Typical Derating Curves At Nominal Line, Full Load, and natural convection

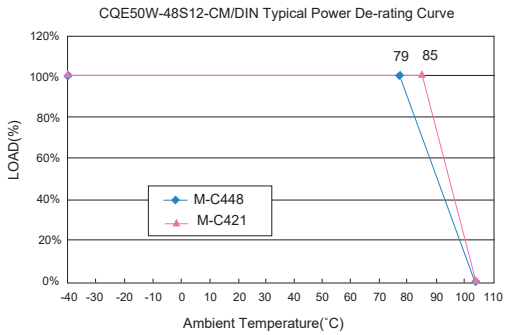


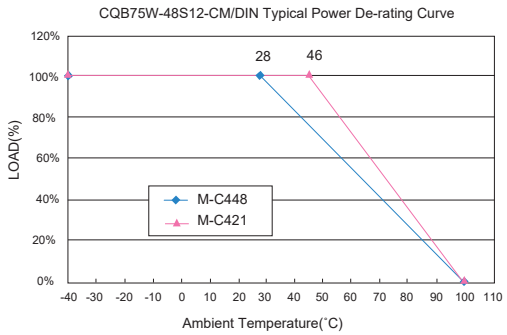


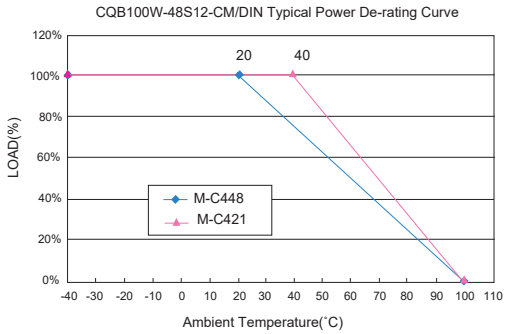


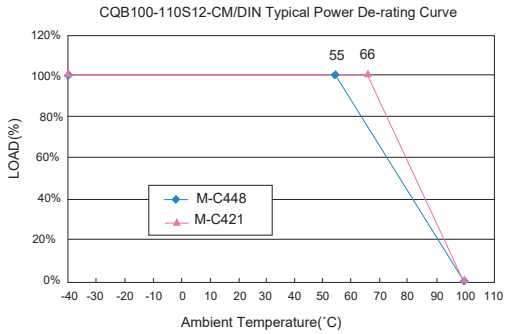


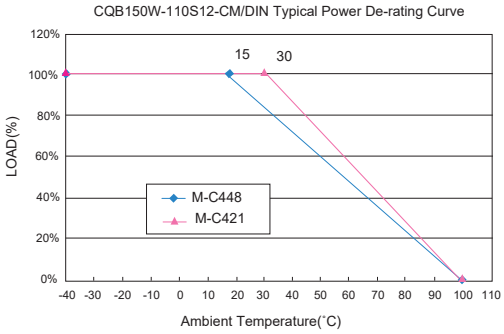


## Ordering Information

### Require input an aluminum capacitor connected in the table below.

| Ordering Information | | | | | | |
|---|---|---|---|---|---|---|
| CHB(E)XXX- | XX | S | XX | N | -XXX | +X-XXXX |
| Model No. | Nominal Input Voltage | | Output Voltage | Remote On/Off | | Heat Sink Type (Option) |
| CQE50W<br>CQB75W<br>CQB100W | 24 : 24VDC<br>48 : 48VDC | Single Output | 3V3 : 3.3VDC<br>05 : 5VDC<br>12 : 12VDC<br>15 : 15VDC<br>24 : 24VDC<br>48 : 48VDC | None: Positive Logic<br>N: Negative Logic | CM: Chassis Mount<br>DIN: Din Rail Mount | M-C448<br>M-C421 |
| CQE50W | | | 05 : 5VDC | | | |
| CQB100 | 110 : 110VDC | | 12 : 12VDC<br>24 : 24VDC | | | |
| CQB150W | 24: 24VDC<br>48: 48VDC<br>110: 110VDC | | 12 : 12VDC<br>24 : 24VDC<br>28 : 28VDC<br>48 : 48VDC | | | |

# CHASSIS MOUNT CQB50W12 SERIES
## 30-50 WATT 12:1 INPUT DC-DC CONVERTERS

### Features

- 30-50W Isolated Output
- Efficiency to 89%
- Fixed Switching Frequency
- 12:1 Input Range
- Regulated Outputs
- Remote On/Off
- Low No Load Power Consumption
- Over Temperature Protection
- Over Voltage/Current Protection
- Continuous Short Circuit Protection
- Shock & Vibration Meets EN50155 (EN61373)
- Safety Meets UL60950-1, EN60950-1 and IEC60950-1
- UL60950-1 2nd (Basic Insulation) Approval for DC Modules
- EN50155:2007 for EMC, Environmental and Characteristic
- Build-In EMI Filter
- Baseplate Cooled
- Fire & Smoke Meets EN45545-2

### Mechanical Dimensions

All Dimensions in Inches(mm)
Tolerance Inches: x.xx=±0.02, X.XXX=±0.010
Millimeters: x.x=±0.5, XXX=±0.25

CMFC

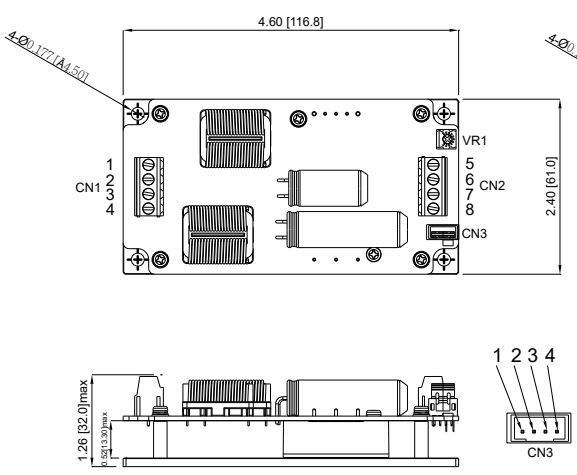


CMFD with Cover

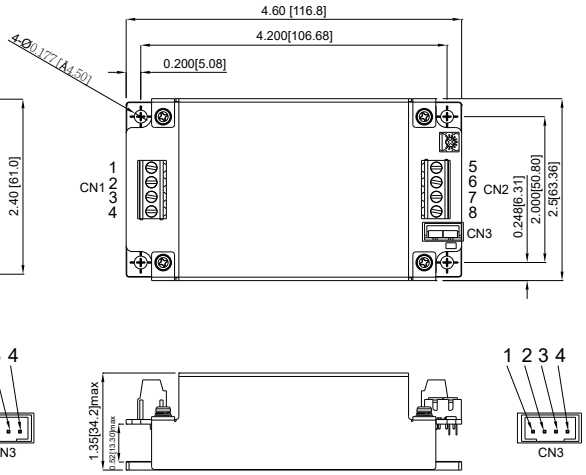


CN1&CN2
PIN CONNECTION

| Pin | Function |
|---|---|
| 1 | +V Input |
| 2 | -V Input |
| 3 | Remote |
| 4 | Case |
| 5 | +V Output |
| 6 | +V Output |
| 7 | -V Output |
| 8 | -V Output |

CN3
PIN CONNECTION

| Pin | Function |
|---|---|
| 1 | -V Output |
| 2 | -Sense |
| 3 | +Sense |
| 4 | +V Output |

| MODEL NUMBER | INPUT VOLTAGE | OUTPUT VOLTAGE | OUTPUT CURRENT MIN. | OUTPUT CURRENT MAX. | INPUT CURRENT NO LOAD | INPUT CURRENT FULL LOAD | % EFF. | CAPACITOR LOAD MAX. |
|---|---|---|---|---|---|---|---|---|
| CQB50W12-72S05□-CMFC<br>CQB50W12-72S05□-CMFD | 14-160 VDC | 5 VDC | 0 mA | 6.0 A | 8 mA | 530 mA | 83 | 10000μF |
| CQB50W12-72S12□-CMFC<br>CQB50W12-72S12□-CMFD | 14-160 VDC | 12 VDC | 0 mA | 4.2 A | 8 mA | 810 mA | 87 | 6800μF |
| CQB50W12-72S24□-CMFC<br>CQB50W12-72S24□-CMFD | 14-160 VDC | 24 VDC | 0 mA | 2.1 A | 8 mA | 800 mA | 89 | 3300μF |
| CQB50W12-72S48□-CMFC<br>CQB50W12-72S48□-CMFD | 14-160 VDC | 48 VDC | 0 mA | 1.05 A | 12 mA | 810 mA | 88 | 680μF |

NOTE:
1. Nominal Input Voltage 72VDC
2. □ = N or none
3. VR1 is Used for Output Voltage Adjustment.
4. Refer to Application Note for Thermal Resistance and Derating Informations.
5. TVS is Included for Input Surge Voltage Protection.
6. Recommend an External Fuse for Input Reverse Polarity Protection (shunt diode is include inside).
7. Input Voltage Range: 14-16.8 VDC (t ≤ 60 sec.)

# Specifications

All Specifications Typical At Nominal Line, Full Load, and 25˚C Unless Otherwise Noted

## INPUT SPECIFICATIONS

| | |
|---|---|
| Input Voltage Range | 72V.....14-160V |
| Input Surge Voltage (100ms max.) | 200Vdc max. |
| Under voltage lockout | power up .....14.6V |
| | power down .....12.6V |
| Positive Logic Remote On/Off (note4&5) | |

## OUTPUT SPECIFICATIONS

| | |
|---|---|
| Voltage Accuracy | ±1.0% max. |
| Transient Response: 25% Step Load Change | <250µs |
| Trim Adj. Range (By VR1) | -20%,+10% |
| Ripple & Noise, 20MHz BW ( see note 3) | 40mV RMS, 100mV pk-pk max. |
| Temperature Coefficient | ±0.02%/°C max. |
| Short Circuit Protection | Continuous |
| Line Regulation (note 1) | ±0.2% max. |
| Load Regulation (note 2) | ±0.2% max. |
| Over Voltage Protection trip Range, % Vo nom. | 115-140% |
| Current Limit | 110% ~220% Nominal Output |
| Start up Time | 30ms typ. |
| Hold up Time | See Application Note |

## GENERAL SPECIFICATIONS

| | |
|---|---|
| Efficiency | See Table |
| Isolation Voltage | Input/Output ..... 3000VDC min. |
| | Input/Case ..... 2500VDC min. |
| | Output/Case ..... 500VAC min. |
| Isolation Resistance | $2x10^8$ ohm min. |
| Isolation Capacitance | 3000pF typ. |
| Switching Frequency | 240KHz typ. |
| Operating Case Temperature | -40˚C to +100˚C |
| Storage Temperature | -40˚C to +105˚C |
| Thermal Shutdown, Case Temp. | 110˚C typ. |
| Humidity | 95% RH max. Non Condensing |
| MTBF ... MIL-HDBK-217F,GB, 25˚C, Full Load | 500Khrs typ. |
| Safety | Meets UL60950-1 |
| EMC (note 5) | Meets EN50155(EN50121-3-2:2008) with External Output Filter Meets EN50155(EN50121-3-2:2015) Meets |
| Shock/Vibration | EN50155(EN61373) |
| Environmental | EN50155(EN60068-2-1, 2, 30) |
| Dimensions | |
| -CMFC | 4.60×2.40x1.26 inches (116.8x61.0x32.0 mm) |
| -CMFD | 4.60×2.49x1.35 inches (116.8x63.4x34.2 mm) |
| Case Material | |
| -CMFC | Aluminum Base |
| -CMFD | Aluminum Base and Aluminum Cover |
| Weight | |
| -CMFC | 210g |
| -CMFD | 296g |

## NOTE

1. Measured from high line to low line.
2. Measured from full load to zero load.
3. Output ripple and noise measured with 1uF ceramic capacitor across output.
4. Logic Compatibility ..... open collector ref to -input
   Module on ..... >3.5Vdc to 160Vdc or open circuit
   Module off ..... 0 to<1.2Vdc
5. Suffix "N" to the model number with negative logic remote on/off
   Module on ..... 0 to< 1.2Vdc
   Module off ..... >4.0Vdc to 160Vdc or open circuit
6. Output connector CN3 wafer with TAIWAN KING PIN TERMINAL P110I series and mate with JST housing PH series or equivalent.
7. CN1 & CN2 connection: DINKLE EK500V-04P series or equivalent, suitable electric wire: 24~12AWG(IEC 0.5~2.5mm2).

# CHASSIS MOUNT CQB150-300S SERIES
## 150 WATT 2:1 INPUT DC-DC CONVERTERS

### Features

- 150W Isolated Output
- Efficiency to 89%
- Low No Load Power Consumption
- Fixed Switching Frequency
- Regulated Outputs
- Over Temperature Protection
- Over Voltage/Current Protection
- Remote On/Off
- Continuous Short Circuit Protection
- Shock & Vibration Meet EN61373
- Safety Meets IEC60950 and IEC62368
- UL60950-1 2nd(Reinforced Insulation) Approval for DC Modules
- Build-In EMI Filter
- Fire & Smoke Meet EN45545-2
- Baseplate cooled

### Mechanical Dimensions

All Dimensions in Inches(mm)
Tolerance Inches: x.xx=±0.02, X.XXX=±0.010
Millimeters: x.x=±0.5, XXX=±0.25

CMFC

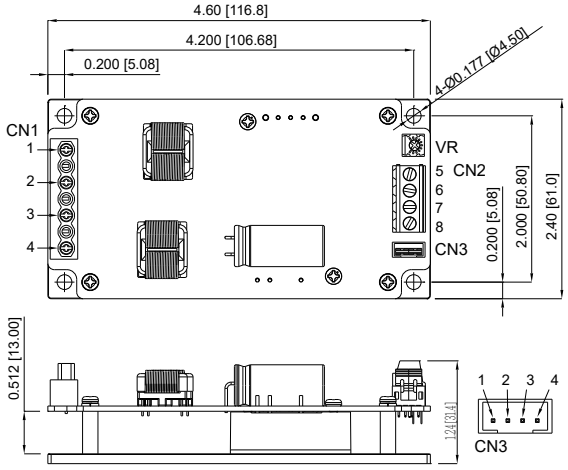


CMFD with Cover

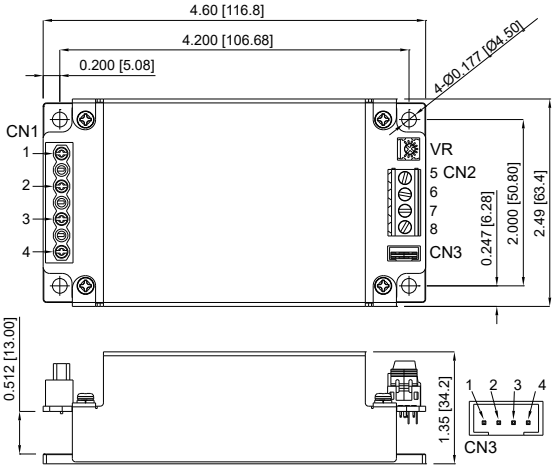


CN1 & CN2
PIN CONNECTION

| PIN | Function |
|---|---|
| 1 | +V Input |
| 2 | -V Input |
| 3 | Remote |
| 4 | Case |
| 5 | +V Output |
| 6 | +V Output |
| 7 | -V Output |
| 8 | -V Output |

CN3
PIN CONNECTION

| PIN | Function |
|---|---|
| 1 | -V Output |
| 2 | -Sense |
| 3 | +Sense |
| 4 | +V Output |

| MODEL NUMBER | INPUT VOLTAGE | OUTPUT VOLTAGE | OUTPUT CURRENT MIN. | OUTPUT CURRENT MAX. | INPUT CURRENT NO LOAD | INPUT CURRENT FULL LOAD | % EFF. | CAPACITOR LOAD MAX. |
|---|---|---|---|---|---|---|---|---|
| CQB150-300S05□-CMFC<br>CQB150-300S05□-CMFD | 180-425 VDC | 5 VDC | 0 mA | 30 A | 10 mA | 580 mA | 85.5 | 10000μF |
| CQB150-300S12□-CMFC<br>CQB150-300S12□-CMFD | 180-425 VDC | 12 VDC | 0 mA | 12.5 A | 10 mA | 560 mA | 89 | 8800μF |
| CQB150-300S15□-CMFC<br>CQB150-300S15□-CMFD | 180-425 VDC | 15 VDC | 0 mA | 10 A | 10 mA | 560 mA | 89 | 8800μF |
| CQB150-300S24□-CMFC<br>CQB150-300S24□-CMFD | 180-425 VDC | 24 VDC | 0 mA | 6.3 A | 10 mA | 570 mA | 88.5 | 3300μF |
| CQB150-300S28□-CMFC<br>CQB150-300S28□-CMFD | 180-425 VDC | 28 VDC | 0 mA | 5.4 A | 10 mA | 570 mA | 88.5 | 3300μF |
| CQB150-300S48□-CMFC<br>CQB150-300S48□-CMFD | 180-425 VDC | 48 VDC | 0 mA | 3.2 A | 10 mA | 570 mA | 89 | 1000μF |

NOTE:
1. Nominal Input Voltage 300VDC
2. □ = N or None
3. VR is used for Output Voltage Adjustment.
4. Refer to application note for thermal resistance and derating informations.
5. TVS is included for input surge voltage protection.
6. Recommend an external fuse for input reverse polarity protection (shunt diode is included inside).

## Specifications

All Specifications Typical At Nominal Line, Full Load, and 25˚C Unless Otherwise Noted

### INPUT SPECIFICATIONS

| | |
|---|---|
| Input Voltage Range | 300V ..... 180-425V |
| Input Surge Voltage (100ms max.) | 500Vdc max. |
| Under voltage lockout | 300Vin power up ..... 170V |
| | 300Vin power down .... 160.5V |
| Positive Logic Remote On/Off (note4&5) | |

### OUTPUT SPECIFICATIONS

| | |
|---|---|
| Voltage Accuracy | ±1.0% max. |
| Transient Response: 25% Step Load Change | <250μs |
| Trim Adj. Range (By VR1) | +10%,-20% |
| Ripple & Noise, 20MHz BW ( see note 3) | |
| 5V | 60mV RMS, 120mV pk-pk max. |
| 12V&15V | 80mV RMS, 150mV pk-pk max. |
| 24V&28V | 100mV RMS, 200mV pk-pk max. |
| 48V | 150mV RMS, 300mV pk-pk max. |
| Temperature Coefficient | ±0.02%/°C max. |
| Short Circuit Protection | Continuous |
| Line Regulation (note 1) | ±0.2% max. |
| Load Regulation (note 2) | 5V .....±0.5% max. |
| | Others .....±0.2% max. |
| Over Voltage Protection trip Range, % Vo nom. | 115-140% |
| Current Limit | 105%-140% Nominal Output |
| Start up Time | 350ms typ. |

### GENERAL SPECIFICATIONS

| | |
|---|---|
| Efficiency | See Table |
| Isolation Voltage | Input/Output ..... 3000VAC min. |
| | Input/Case ..... 2500VAC min. |
| | Output/Case ..... 500VAC min. |
| Isolation Resistance | $10^8$ ohm min. |
| Switching Frequency | 360KHz typ. |
| Operating Case Temperature | -40˚C to 100˚C |
| Storage Temperature | -40˚C to +105˚C |
| Thermal Shutdown, Case Temp.(DC Modele) | 110˚C typ. |
| Humidity | 95% RH max. Non condensing |
| MTBF ... MIL-STD-217F, GB, 25˚C, Full Load | 589 Khrs typ. |
| Safety | Meets UL60950-1 |
| EMC | Meets EN55032/EN55022 Class A |
| Shock/Vibration | MIL-STD-810F/EN61373 |
| Dimensions | |
| -CMFC | 4.60×2.40x1.26 inches (116.8x61.0x32.0 mm) |
| -CMFD | 4.60x2.49x1.35 inches (116.8x63.4x34.2 mm) |
| Case Material | |
| -CMFC | Aluminum Base |
| -CMFD | Aluminum Base and Aluminum Cover |
| Weight | |
| -CMFC | 215g |
| -CMFD | 300g |

### NOTE

1. Measured from high line to low line.
2. Measured from full load to zero load.
3. Output ripple and noise measured with 1uF ceramic capacitor across output.
4. Logic Compatibility ..... open collector ref to –input
Module on ..... ..... >3.5Vdc to 12Vdc
Module off .....0 to < 1.2Vdc or open circuit
5. Suffix "N" to the model number with negative logic remote on/off.
Module on ..... .....0 to < 1.2Vdc or open circuit
Module off ..... >3.5Vdc to 12Vdc
6. Input connectors CN1connection: DINKLE 166-04P5 series or equivalent, suitable electric wire: 18~12AWG( IEC 0.5~4mm$^2$ ).
7. Connector CN205 wafer with TAIWAN KING PIN TERMINAL P110I series and mate with JST housing PH series or equivalent.
8. Output connectors CN2 connection: DINKLE EK500V-04P series or equivalent,. suitable electric wire: 24~12AWG( IEC 0.5~2.5mm2).

# CHASSIS MOUNT CQB150W-110S SERIES
## 150 WATT 4:1 INPUT DC-DC CONVERTERS

### Features

- 150W Isolated Output
- Efficiency to 91%
- Fixed Switching Frequency
- 4 :1 Input Range
- Regulated Outputs
- Remote On/Off
- Low No Load Power Consumption
- Over Temperature Protection
- Over Voltage/Current Protection
- Continuous Short Circuit Protection
- Shock & Vibration Meet EN50155 (EN61373)
- Safety Meet UL60950-1, EN60950-1 and IEC60950-1
- UL60950-1 2nd (Basic Insulation) Approval for DC Modules
- EN50155:2007 for EMC, Environmental and Characteristic
- Build-In EMI Filter
- Fire & Smoke Meet EN45545-2

### Mechanical Dimensions

All Dimensions In Inches (mm)
Tolerance Inches: X.XX=±0.02, X.XXX=±0.010
Millimeters: X.X=±0.5, X.XX=±0.25

CMFC

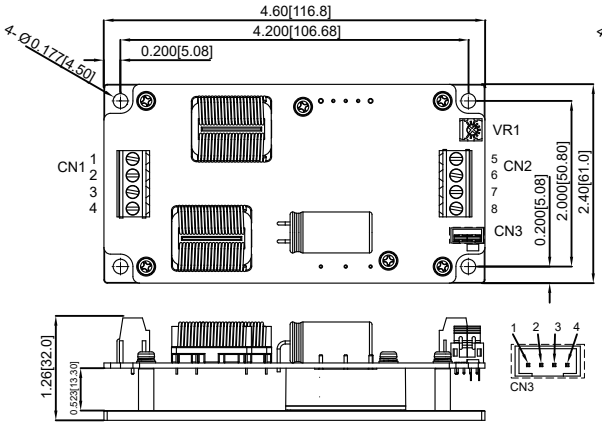


CMFD with Cover

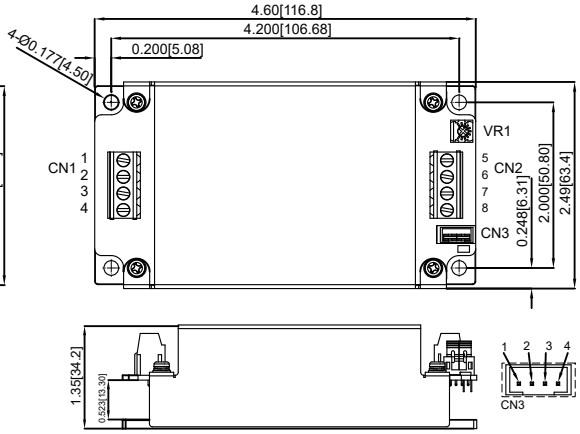


| CN1&CN2 PIN CONNECTION | |
|---|---|
| PIN | Function |
| 1 | +V Input |
| 2 | -V Input |
| 3 | Remote |
| 4 | Case |
| 5 | +V Output |
| 6 | +V Output |
| 7 | -V Output |
| 8 | -V Output |

| CN3 PIN CONNECTION | |
|---|---|
| PIN | Function |
| 1 | -V Output |
| 2 | -Sense |
| 3 | +Sense |
| 4 | +V Output |

| MODEL NUMBER | INPUT VOLTAGE | OUTPUT VOLTAGE | OUTPUT CURRENT MIN. | OUTPUT CURRENT MAX. | INPUT CURRENT NO LOAD | INPUT CURRENT FULL LOAD | % EFF. | CAPACITOR LOAD MAX. |
|---|---|---|---|---|---|---|---|---|
| CQB150W-110S05□-CMFC<br>CQB150W-110S05□-CMFD | 43-160 VDC | 5 VDC | 0mA | 30.0 A | 15 mA | 1.53 A | 89 | 30000μF |
| CQB150W-110S12□-CMFC<br>CQB150W-110S12□-CMFD | 43-160 VDC | 12 VDC | 0mA | 12.5 A | 15 mA | 1.50 A | 91 | 12500μF |
| CQB150W-110S24□-CMFC<br>CQB150W-110S24□-CMFD | 43-160 VDC | 24 VDC | 0mA | 6.3 A | 15 mA | 1.56 A | 88 | 6300μF |
| CQB150W-110S28□-CMFC<br>CQB150W-110S28□-CMFD | 43-160 VDC | 28 VDC | 0mA | 5.4 A | 15 mA | 1.56 A | 88 | 5400μF |
| CQB150W-110S48□-CMFC<br>CQB150W-110S48□-CMFD | 43-160 VDC | 48 VDC | 0mA | 3.2 A | 15 mA | 1.56 A | 89.5 | 1000μF |

NOTE:
1. Nominal Input Voltage 110VDC
2. □ = N or None.
3. VR1 is used for Output Voltage Adjustment.
4. Refer to application note for thermal resistance and derating informations.
5. TVS is included for input surge voltage protection.
6. Recommend an external fuse for input reverse polarity protection (shunt diode is included inside)

# Specifications

All Specifications Typical at Nominal Line, Full Load, and 25˚C Unless Otherwise Noted

## INPUT SPECIFICATIONS

| | |
|---|---|
| Input Voltage Range | 110V ..... 43-160V |
| Input Surge Voltage (100ms max.) | 110V..... 200Vdc max. |
| Under voltage lockout | 110Vin power up..... 41.5V |
| | 110Vin power down..... 38.5V |
| Positive Logic Remote On/Off | See note 4 & 5 |

## OUTPUT SPECIFICATIONS

| | |
|---|---|
| Voltage Accuracy: | ±1.0% max. |
| Transient Response: 25% Step Load Change | <250usec |
| Trim Adj. Range (By VR1) | ±10% |
| Ripple & Noise, 20MHz BW | |
| 5V&12V | 40mV RMS, 100mV pk-pk max. |
| 24V&28V | 100mV RMS, 200mV pk-pk max. |
| 48V | 150mV RMS, 300mV pk-pk max. |
| Temperature Coefficient | ±0.02%/°C max. |
| Short Circuit Protection | Continuous |
| Line Regulation (note 1) | ±0.2% max. |
| Load Regulation (note 2) | 5V.....±0.5% max. |
| | Others.....±0.2% max. |
| Over Voltage Protection Trip Range, % Vo nom. | 115-140% |
| Current Limit | 110%-160% Nominal Output |
| Start up time | 100ms typ. |
| Hold up Time | See Application Note |

## GENERAL SPECIFICATIONS

| | | |
|---|---|---|
| Efficiency | | See Table |
| Isolation Voltage | | Input/Output ..... 3000VDC min. |
| | | Input/Case ..... 2250VDC min. |
| | | Output/Case ..... 500VAC min. |
| Isolation Resistance | | $10^8$ohm min. |
| Isolation Capacitance (DC Module) | | 1500pF typ |
| Switching Frequency | | 300KHz typ |
| Operating Case Temperature | | -40˚C to +100˚C |
| Storage Temperature | | -40˚C to +105˚C |
| Thermal Shutdown, Case Temperature(DC Module) | | 110˚C typ. |
| Humidity | | 95% RH max. Non condensing |
| MTBF ... MIL-HDBK-217F, GB, 25˚C, Full Load | | 600Khrs typ. |
| Safety | | Meets UL60950-1 |
| EMC | | Meets EN50155(EN50121-3-2:2008) |
| | | Meets EN50155(EN50121-3-2:2015) with External Output Filter |
| Shock/Vibration | | Meets EN50155(EN61373) |
| Environmental | | EN50155(EN60068-2-1,2,30) |
| Case Material | -CMFC | Aluminum Base |
| | -CMFD | Aluminum Base and Aluminum Cover |
| Dimensions | -CMFC | 4.60x2.40x1.26 inches (116.8x61.0x32.0 mm) |
| | -CMFD | 4.60x2.49x1.35 Inches (116.8x63.4x34.2 mm) |
| Weight | -CMFC | 215g |
| | -CMFD | 300g |

### NOTE

1. Measured from high line to low line.
2. Measured from full load to zero load.
3. Output ripple and noise measured with 1uF ceramic capacitor across output.
4. Logic Compatibility ..... open collector ref to -input
   Module on ..... >3.5Vdc to 160Vdc or open circuit
   Module off ..... 0 to< 1.2Vdc
5. Suffix "N" to the model number with negative logic remote on/off
   Module on ..... 0 to< 1.2Vdc
   Module off ..... >3.5Vdc to 160Vdc or open circuit
6. Output connector CN3 wafer with TAIWAN KING PIN TERMINAL P110I series and mate with JST housing PH series or equivalent.
7. CN1 & CN2 connection: DINKLE EK500V-04P series or equivalent, suitable electric wire: 24~12AWG( IEC 0.5~2.5mm$^2$ ).

# CHB CHASSIS MOUNT/DIN-RAIL
## 33-100W, WIDE INPUT RANGE

### Features

- 33W-100W Isolated Output
- 4 : 1 Wide Input Range
- Chassis Mount/Din Rail Mount
- Input Over Voltage Protection
- Regulated Outputs
- Continuous Short Circuit Protection
- CE Mark Meets 2004/108/EEC
- Safety Meets UL60950-1, EN60950-1, and IEC60950-1
- UL60950-1 Approval for DC Modules
  (Excludes CHE75W, CHE100W and 28Vout)

E176177

**HALF BRICK DC-DC CONVERTER WITH HEATSINK**

### Mechanical Dimensions

All Dimensions in Inches (mm)
Tolerance Inches: X.XX=±0.02 , X.XXX=±0.010
Millimeters: X.X=±0.5 , X.XX=±0.25

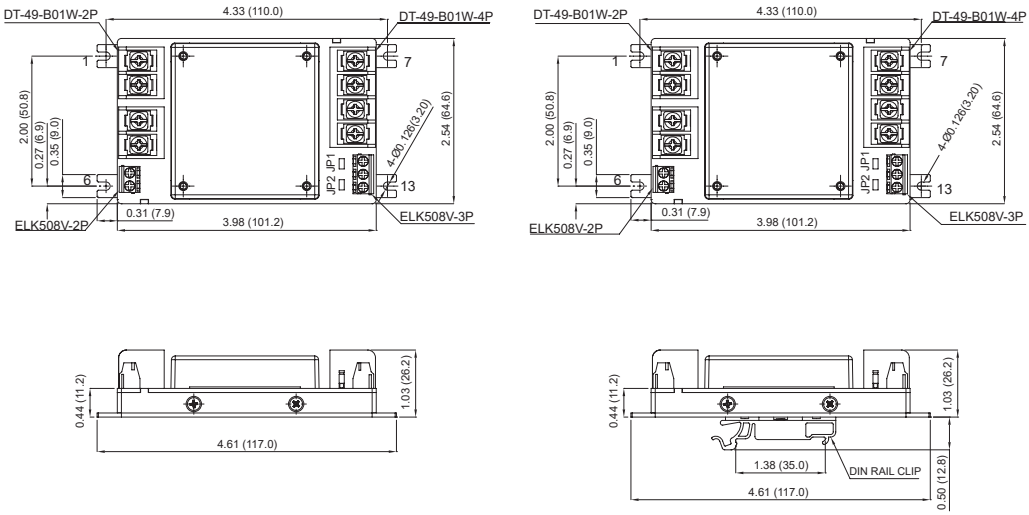


| PIN CONNECTION | |
|---|---|
| PIN | Function |
| 1,2 | +V Input |
| 3,4 | -V Input |
| 5 | On/Off |
| 6 | CASE |
| 7,8 | +V Output |
| 9,10 | -V Output |
| 11 | +Sense |
| 12 | Trim |
| 13 | -Sense |
| JP1 | Short +S& +V Output |
| JP2 | Short -S& -V Output |

| MODEL NUMBER | INPUT | OUTPUT |
|---|---|---|
| CHB50W-XXSXX-CM/DIN | NC | 47μF/100V for 48Vout Models Only |
| CHB75W-XXSXX-CM/DIN | 47μF/100V for 48Vin Models | 47μF/100V for 48Vout Models Only |
| CHE75W-XXSXX-CM/DIN | 100uF/100V | 10μF/100V for 48Vout Models Only |
| CHB100W-XXSXX-CM/DIN | 100μF/100V for 24Vin Models<br>47μF/100V for 48Vout Models | 47μF/100V for 48Vin Models |
| CHE100W-XXSXX-CM/DIN | 220μF/100V | 10μF/100V for 48Vout Models Only |

NOTE:
1. Short JP1 to connect +S and +Vo, JP2 to connect –S and –Vo with local sense.
2. Remove jumper( JP1& JP2),terminal block port +S,-S & Trim can be used to Output Remote Sensing or Output Voltage Adjustment functional(see application note).
3. Thermal resistance is referenced to the application note.
4. Include TVS for input surge voltage protection.
5. Recommend external fuse for input reverse polarity protection (Include shunt diode inside).
6. Suffix “DIN” to the Model number with din mount, the clip is suitable for TS-35 din rail.

## Derating Curve

### Typical Derating Curves At Nominal Line, Full Load, and natural convection

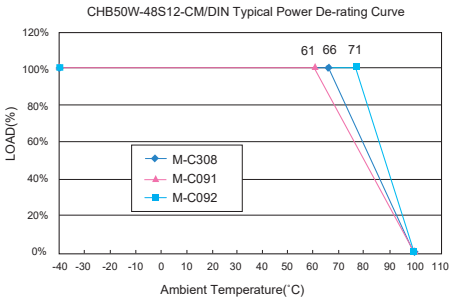


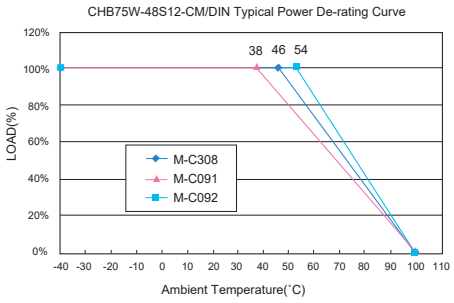


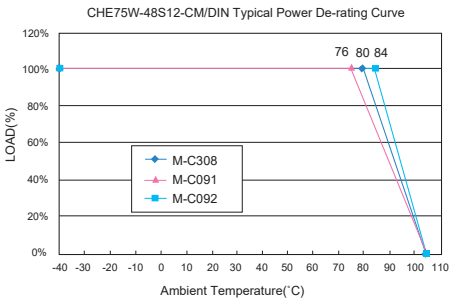


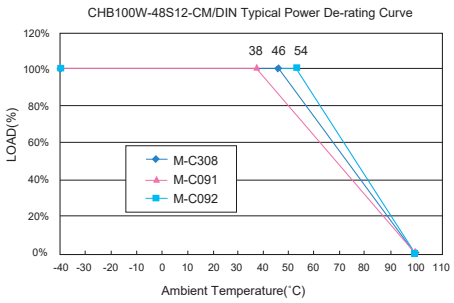


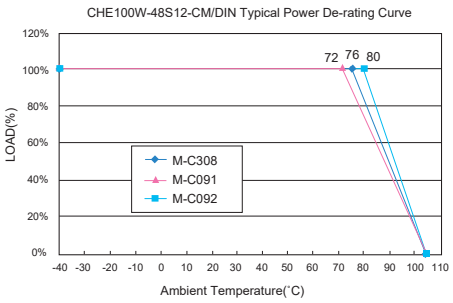


## Ordering Information

### Require input an aluminum capacitor connected in the table below.

| Ordering Information | | | | | | |
|---|---|---|---|---|---|---|
| CHB(E)XXX- | XX | S | XX | N | -XXX | +X-XXXX |
| Model No. | Nominal Input Voltage | | Output Voltage | Remote On/Off | | Heat Sink Type (Option) |
| CHB50W<br>CHB75W<br>CHE75W<br>CHB100W<br>CHE100W | 24: 24VDC<br>48: 48VDC | Single Output | 3V3 : 3.3VDC<br>05 : 5VDC<br>12 : 12VDC<br>15 : 15VDC<br>24 : 24VDC<br>48 : 48VDC | None: Positive Logic<br>N: Negative Logic | CM: Chassis Mount<br>DIN: Din Rail Mount | M-C308<br>M-C091<br>M-C092 |
| CHB50W<br>CHB75W<br>CHB100W | | | 28: 28VDC | | | |

# CHASSIS MOUNT CHB300W-110S SERIES
## 300 WATT 4:1 INPUT DC-DC CONVERTERS

### Features

- 300W Isolated Output
- Efficiency to 90.5%
- Low No Load Power Consumption
- Fixed Switching Frequency
- 4 :1 Input Range
- Regulated Outputs
- Over Temperature Protection
- Over Voltage/Current Protection
- Remote On/Off
- Continuous Short Circuit Protection
- Shock & Vibration Meet EN50155 (EN61373)
- Safety Meets UL60950-1, EN60950-1, and IEC60950-1
- UL60950-1 2nd (Basic Insulation) Approval for DC Modules
- Meets EN50155:2007 for EMC, Environmental and Characteristic
- Build-In EMI Filter
- Fire & Smoke Meet EN45545-2
- Baseplate Cooled

### Mechanical Dimensions

All Dimensions In Inches (mm)
Tolerance Inches: X.XX= ±0.02 , X.XXX= ±0.010
Millimeters: X.X= ±0.5 , X.XX=±0.25

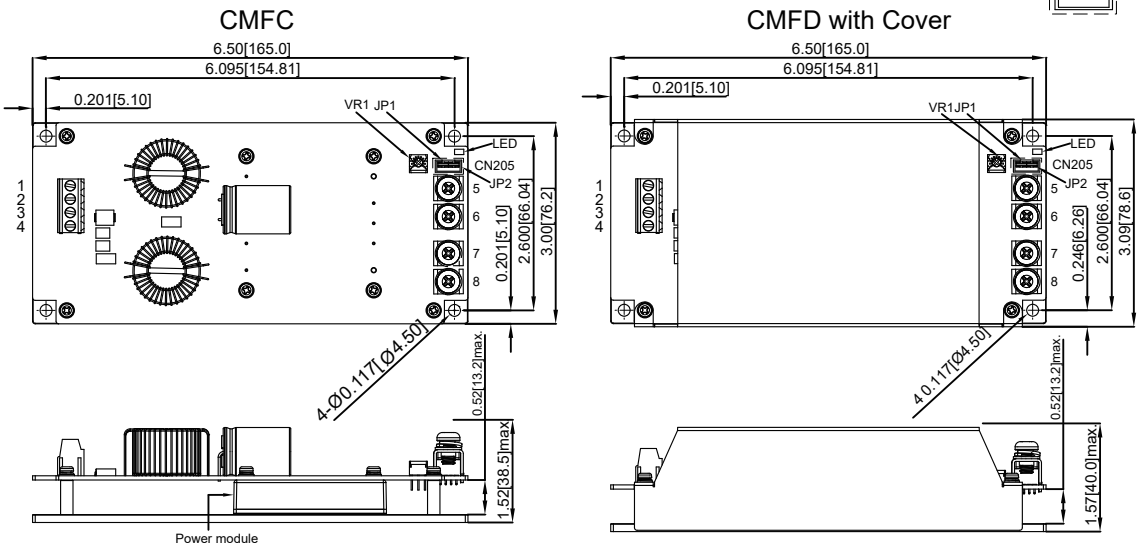


| CN205: PIN CONNECTION | |
|---|---|
| PIN | Function |
| 1 | +Sense |
| 2 | +V Output |
| 3 | -Sense |
| 4 | -V Output |

*JP1: Short PIN1 & PIN2
*JP2: Short PIN3 & PIN4

| PIN CONNECTION | |
|---|---|
| PIN | Function |
| 1 | Case |
| 2 | On/Off |
| 3 | -V Input |
| 4 | +V Input |
| 5 | NP/-V Output |
| 6 | -V Output |
| 7 | +V Output |
| 8 | NP/+V Output |

*PIN5 & 8 for 5Vo Only

| MODEL NUMBER | INPUT VOLTAGE | OUTPUT VOLTAGE | OUTPUT CURRENT MIN. | OUTPUT CURRENT MAX. | INPUT CURRENT NO LOAD | INPUT CURRENT FULL LOAD | % EFF. | CAPACITOR LOAD MAX. |
|---|---|---|---|---|---|---|---|---|
| CHB300W-110S05□-CMFC<br>CHB300W-110S05□-CMFD | 43-160 VDC | 5 VDC | 0mA | 60.0 A | 15 mA | 3153 mA | 86.5 | 60000uF |
| CHB300W-110S12□-CMFC<br>CHB300W-110S12□-CMFD | 43-160 VDC | 12 VDC | 0mA | 25.0 A | 15 mA | 3047 mA | 89.5 | 25000µF |
| CHB300W-110S24□-CMFC<br>CHB300W-110S24□-CMFD | 43-160 VDC | 24 VDC | 0mA | 12.5 A | 15 mA | 3064 mA | 89 | 12500uF |
| CHB300W-110S28□-CMFC<br>CHB300W-110S28□-CMFD | 43-160 VDC | 28 VDC | 0mA | 10.7A | 15 mA | 3060 mA | 89 | 10700uF |
| CHB300W-110S48□-CMFC<br>CHB300W-110S48□-CMFD | 43-160 VDC | 48 VDC | 0mA | 6.25A | 15 mA | 3013 mA | 90.5 | 4700uF |

NOTE:
1. Nominal Input Voltage 110VDC
2. □ = N or None
3. VR1 is used for Output Voltage Adjustment.
4. Refer to application note for thermal resistance and derating informations.
5. TVS is included for input surge voltage protection.
6. Recommend an external fuse for input reverse polarity protection (shunt diode is include inside).

# Specifications

All Specifications Typical At Nominal Line, Full Load, and 25˚C Unless Otherwise Noted

## INPUT SPECIFICATIONS

| | |
|---|---|
| Input Voltage Range | 110V.....43-160V |
| Input Surge Voltage (100ms max.) | 200Vdc max. |
| Under voltage lockout | 110Vin Power up.....42V<br>110Vin Power down.....39.5V |
| Positive Logic Remote On/Off | See note 4 & 5 |

## OUTPUT SPECIFICATIONS

| | |
|---|---|
| Voltage Accuracy: | ±1.0% max. |
| Transient Response: 25% Step Load Change | <250usec |
| Trim Adj. Range (By VR1) | ±10% |
| Ripple & Noise, 20MHz BW (note3) | |
| 5V | 60mV RMS, 120mV pk-pk max |
| 12V | 80mV RMS, 150mV pk-pk max. |
| 24V&28V | 100mV RMS, 200mV pk-pk max. |
| 48V | 150mV RMS, 300mV pk-pk max. |
| Temperature Coefficient | ±0.02%/°C max. |
| Short Circuit Protection | Continuous |
| Line Regulation (note 1) | ±0.2% max. |
| Load Regulation (note 2) | 5V..... ±0.5% max.<br>Others..... ±0.2% max. |
| Over Voltage Protection trip Range, % Vo nom. | 115-140% |
| Current Limit | 110%-160% Nominal Output |
| Start up time | 50mS typ. |
| Hold up Time | See Application Note |

## GENERAL SPECIFICATIONS

| | | |
|---|---|---|
| Efficiency | | See Table |
| Isolation Voltage | | Input/Output ..... 3000VDC min.<br>Input/Case ..... 3000VDC min.<br>Output/Case ..... 500VAC min. |
| Isolation Resistance | | $10^8$ohm min. |
| Isolation Capacitance | | 8000pF typ |
| Switching Frequency | | 300KHz typ |
| Operating Case Temperature | | -40˚C to 100˚C |
| Storage Temperature | | -40˚C to +105˚C |
| Thermal Shutdown, Case Temperature(DC Module) | | 110˚C typ. |
| Humidity | | 95% RH max. Non Condensing |
| MTBF ... MIL-HDBK-217F, GB, 25˚C, Full Load | | 460Khrs typ. |
| Safety | | Meets UL60950-1 |
| EMC | | Meets EN50155(EN50121-3-2:2008)<br>with External Output Filter<br>Meets EN50155(EN50121-3-2:2015) |
| Shock/Vibration | | EN50155(EN61373) |
| Environmental | | EN50155(EN60068-2-1,2,30) |
| Case Material | -CMFC | Aluminum Base |
| | -CMFD | Aluminum Base and Aluminum Cover |
| Dimensions | -CMFC | 6.50×3.00×1.52 Inches<br>(165.0×76.2×38.5mm) |
| | -CMFD | 6.50×3.09×1.57 Inches<br>(165.0×78.6×40.0mm) |
| Weight | -CMFC | 380g |
| | -CMFD | 435g |

## NOTE

1. Measured from high line to low line.
2. Measured from full load to zero load.
3. Output ripple and noise measured with 1uF ceramic capacitor across output.
4. Logic Compatibility ..... open collector ref to -input
   Module on ..... >3.5Vdc to 160Vdc or open circuit
   Module off ..... 0 to < 1.2Vdc
5. Suffix "N" to the model number with negative logic remote on/off.
   Module on ..... 0 to < 1.2Vdc
   Module off ..... >3.5Vdc to 160Vdc or open circuit
6. Input connectors PIN1~4 use DINKLE EK500V-04P series or equivalent,
   suitable electric wire: 24~10AWG( IEC 0.5~2.5$mm^2$ ).
7. Connector CN205 wafer with TAIWAN KING PIN TERMINAL P110I
   series and mate with JST housing PH series or equivalent.
8. Output connectors PIN5~8 use M5 terminal screw.

# CHASSIS MOUNT CHB300-300S SERIES
## 300 WATT 2:1 INPUT DC-DC CONVERTERS

### Features

- 300W Isolated Output
- Efficiency to 90%
- Low No Load Power Consumption
- Fixed Switching Frequency
- Regulated Outputs
- Over Temperature Protection
- Over Voltage/Current Protection
- Remote On/Off
- Continuous Short Circuit Protection
- Shock & Vibration Meet EN61373
- Safety Meets IEC60950 and IEC62368
- UL60950-1 2nd (Reinforced Insulation) Approval for DC Modules
- Build-In EMI Filter
- Fire & Smoke Meet EN45545-2
- Baseplate cooled

CE

### Mechanical Dimensions

All Dimensions In Inches (mm)
Tolerance Inches: X.XX= ±0.02 , X.XXX= ±0.010
Millimeters: X.X= ±0.5 , X.XX=±0.25

CMFC

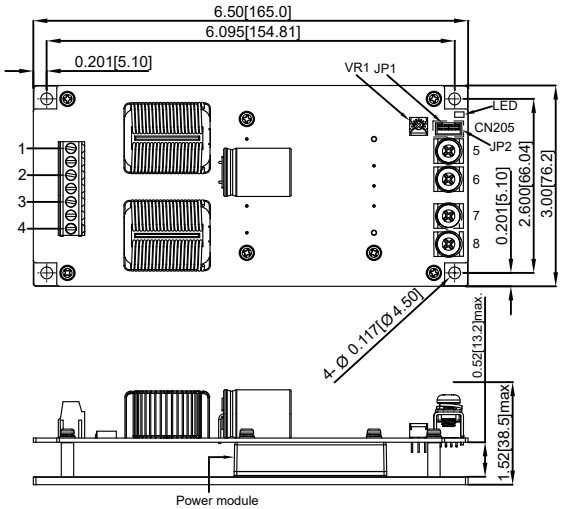


CMFD with Cover

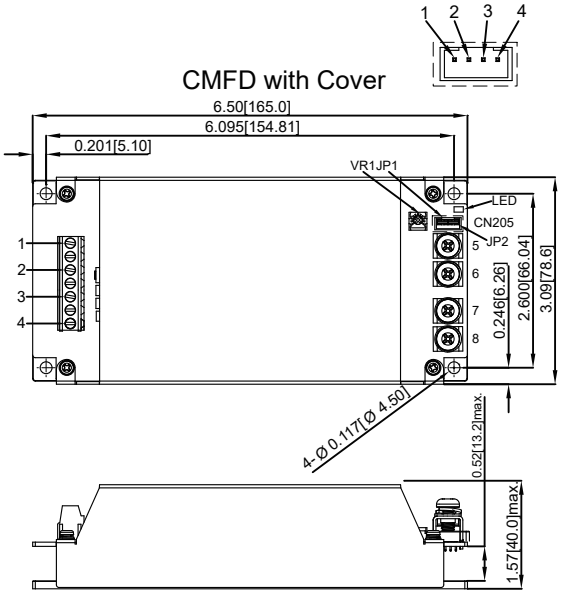


| CN205: PIN CONNECTION | |
|---|---|
| PIN | Function |
| 1 | +V output |
| 2 | +Sense |
| 3 | -Sense |
| 4 | -V Output |

*JP1: Short PIN1 & PIN2
*JP1: Short PIN3 & PIN4

| PIN CONNECTION | |
|---|---|
| PIN | Function |
| 1 | Case |
| 2 | On/Off |
| 3 | -V Input |
| 4 | +V Input |
| 5 | NP/-V Output |
| 6 | -V Output |
| 7 | +V Output |
| 8 | NP/+V Output |

*PIN5 & 8 for 5Vo Only

| MODEL NUMBER | INPUT VOLTAGE | OUTPUT VOLTAGE | OUTPUT CURRENT MIN. | OUTPUT CURRENT MAX. | INPUT CURRENT NO LOAD | INPUT CURRENT FULL LOAD | % EFF. | CAPACITOR LOAD MAX. |
|---|---|---|---|---|---|---|---|---|
| CHB300-300S05□-CMFC<br>CHB300-300S05□-CMFD | 180-425 VDC | 5 VDC | 0mA | 60.0 A | 15 mA | 1920 mA | 88.5 | 10000µF |
| CHB300-300S12□-CMFC<br>CHB300-300S12□-CMFD | 180-425 VDC | 12 VDC | 0mA | 25.0 A | 15 mA | 1920 mA | 87.5 | 10000µF |
| CHB300-300S24□-CMFC<br>CHB300-300S24□-CMFD | 180-425 VDC | 24 VDC | 0mA | 12.5 A | 15 mA | 1870 mA | 90 | 6000µF |
| CHB300-300S28□-CMFC<br>CHB300-300S28□-CMFD | 180-425 VDC | 28 VDC | 0mA | 10.7 A | 15 mA | 1870 mA | 90 | 6000µF |
| CHB300-300S48□-CMFC<br>CHB300-300S48□-CMFD | 180-425 VDC | 48 VDC | 0mA | 6.25 A | 15 mA | 1870 mA | 90 | 3000µF |

NOTE:
1. Nominal Input Voltage 300VDC
2. □ = N or None
3. VR1 is used for Output Voltage Adjustment.
4. Refer to application note for thermal resistance and derating informations.
5. TVS is included for input surge voltage protection.
6. Recommend an external fuse for input reverse polarity protection (shunt diode is included inside).

# Specifications

All Specifications Typical At Nominal Line, Full Load, and 25˚C Unless Otherwise Noted

## INPUT SPECIFICATIONS

| | |
|---|---|
| Input Voltage Range | 300V .....180-425V |
| Input Surge Voltage (100ms max.) | 500Vdc max. |
| Under voltage lockout | 300Vin Power up..... 170V<br>300Vin Power down....160.5V |
| Positive Logic Remote On/Off | See note 4 & 5 |

## OUTPUT SPECIFICATIONS

| | |
|---|---|
| Voltage Accuracy: | ±1.0% max. |
| Transient Response: 25% Step Load Change | <250us |
| Trim Adj. Range (By VR1) | ±10, -20% |
| Ripple & Noise, 20MHz BW (note3) | |
| 5V | 60 mV RMS, 120mV pk-pk max. |
| 12V | 80 mV RMS, 150mV pk-pk max. |
| 24V&28V | 100mV RMS, 200mV pk-pk max. |
| 48V | 150mV RMS, 300mV pk-pk max. |
| Temperature Coefficient | ±0.02%/°C max. |
| Short Circuit Protection | Continuous |
| Line Regulation (note 1) | ±0.2% max. |
| Load Regulation (note 2) | 5V.....±0.5% max.<br>Others.....±0.2% max. |
| Over Voltage Protection trip Range, % Vo nom. | 115-140% |
| Current Limit | 105%-140% Nominal Output |
| Start up time | 350ms typ. |

## GENERAL SPECIFICATIONS

| | |
|---|---|
| Efficiency | See Table |
| Isolation Voltage | Input/Output ..... 3000VAC min.<br>Input/Case ..... 2500VAC min.<br>Output/Case ..... 500VAC min. |
| Isolation Resistance | $10^8$ ohm min. |
| Switching Frequency | 300KHz typ |
| Operating Case Temperature | -40˚C to 100˚C |
| Storage Temperature | -40˚C to +105˚C |
| Thermal Shutdown, Case Temperature(DC Module) | 105˚C typ. |
| Humidity | 95% RH max. Non condensing |
| MTBF ... MIL-HDBK-217F, GB, 25˚C, Full Load | 537Khrs typ. |
| Safety | Meets UL60950-1 |
| EMC | Meets EN55032/EN55022 Class A |
| Shock/Vibration | MIL-STD-810F / EN61373 |
| Case Material -CMFC | Aluminum Base |
| -CMFD | Aluminum Base and Aluminum Cover |
| Dimensions -CMFC | 6.50×3.00×1.52 Inches<br>(165.0×76.2×38.5mm) |
| -CMFD | 6.50×3.09×1.57 Inches<br>(165.0×78.6×40.0mm) |
| Weight -CMFC | 380g |
| -CMFD | 435g |

## NOTE

1. Measured from high line to low line.
2. Measured from full load to zero load.
3. Output ripple and noise measured with 1uF ceramic capacitor across output.
4. Logic Compatibility ..... open collector ref to –input
   Module on ..... ..... >3.5Vdc to 12Vdc
   Module off .....0 to < 1.2Vdc or open circuit
5. Suffix "N" to the model number with negative logic remote on/off.
   Module on ..... .....0 to < 1.2Vdc or open circuit
   Module off ..... >3.5Vdc to 12Vdc
6. Input connectors PIN1~4 use DINKLE 166-04P5 series or equivalent,
   suitable electric wire: 18~12AWG( IEC 0.5~4mm$^2$ ).
7. Connector CN205 wafer with TAIWAN KING PIN TERMINAL P110I
   series and mate with JST housing PH series or equivalent.
8. Output connectors PIN5~8 use M5 terminal screw.

# CHASSIS MOUNT CFB600W-110S SERIES
## CFB600 WATT 4:1 INPUT DC-DC CONVERTERS

### Features

- 600W Isolated Output
- Efficiency to 88%
- Fixed Switching Frequency
- 4:1 Input Range
- Regulated Outputs
- Remote On/Off
- Over Temperature Protection
- Over Voltage/Current Protection
- Continuous Short Circuit Protection
- Shock & Viberation Meets EN50155 (EN61373)
- Safety Meets UL60950-1, EN60950-1, and IEC60950-1
- UL60950-1 2nd (Basic Insulation) Approval for DC Modules
- Build-In EMI Filter
- Fire & Smoke Meet EN45545-2
- Baseplate cooled

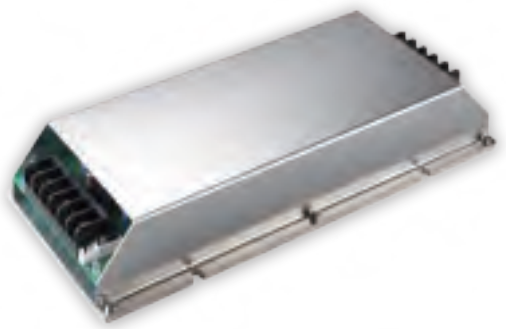

### Mechanical Dimensions

All Dimensions In Inches (mm)
Tolerance Inches: X.XX= ±0.02 , X.XXX= ±0.010
Millimeters: X.X= ±0.5 , X.XX=±0.25

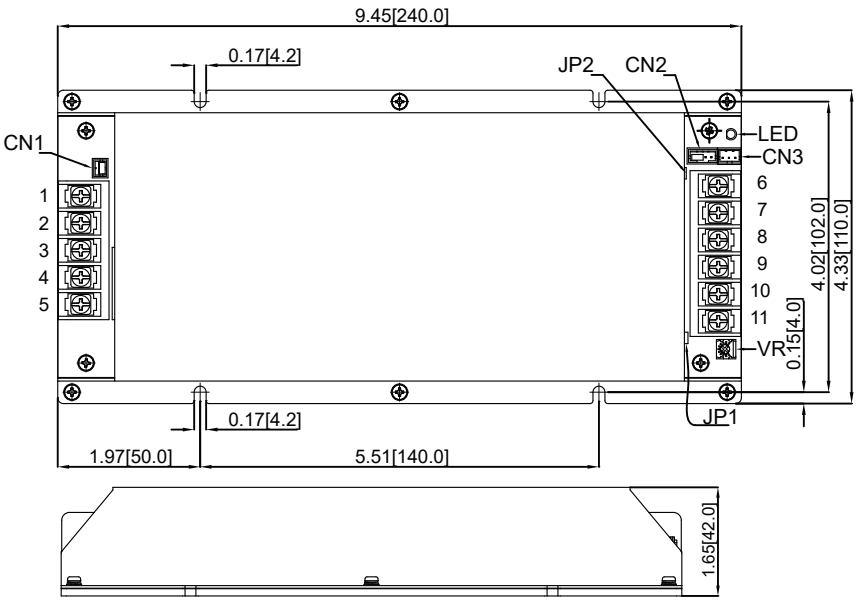


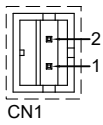


CN1 (On/Off JP)

| PIN CONNECTION | |
|---|---|
| PIN | Function |
| 1 | -V Input |
| 2 | -On/Off |

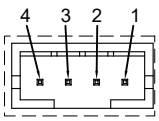


CN2 (Trim JP)

| PIN CONNECTION | |
|---|---|
| PIN | Function |
| 1 | -Sense |
| 2 | +Sense |
| 3 | Trim |
| 4 | Rt |

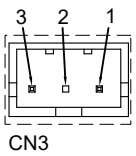


CN3 (PC JP)

| PIN CONNECTION | |
|---|---|
| PIN | Function |
| 1 | AUX |
| 2 | IOG |
| 3 | PC |

| PIN CONNECTION | |
|---|---|
| PIN | Function |
| 1 | PE |
| 2,3 | -V Input |
| 4,5 | +V Input |
| 6,7,8 | -V Output |
| 9,10,11 | +V Output |
| JP1 | Short +S&+Vo |
| JP2 | Short -S&-Vo |

| MODEL NUMBER | INPUT VOLTAGE | OUTPUT VOLTAGE | OUTPUT CURRENT | | INPUT CURRENT | | % EFF. | CAPACITOR LOAD MAX. |
|---|---|---|---|---|---|---|---|---|
| | | | MIN. | MAX. | NO LOAD | FULL LOAD | | |
| CFB600W-110S12□-CMFD | 43-160 VDC | 12 VDC | 0mA | 50 A | 25 mA | 6.3 A | 87 | 10000µF |
| CFB600W-110S24□-CMFD | 43-160 VDC | 24 VDC | 0mA | 25 A | 25 mA | 6.2 A | 88 | 10000µF |
| CFB600W-110S28□-CMFD | 43-160 VDC | 28 VDC | 0mA | 21.4 A | 25 mA | 6.2 A | 88 | 10000µF |
| CFB600W-110S48□-CMFD | 43-160 VDC | 48 VDC | 0mA | 12.5 A | 25 mA | 6.2 A | 88 | 10000µF |

NOTE:
1. Nominal Input Voltage 300VDC
2. □ = P or None
3. VR is used for Output Voltage Adjustment.
4. Refer to Application Note for Thermal Resistance and Derating Informations.
5. TVS is Included for Input Surge Voltage Protection
6. Recommend an External Fuse for Input Reverse Polarity Protection (shunt diode is include inside).

# Specifications

All Specifications Typical At Nominal Line, Full Load, and 25˚C Unless Otherwise Noted

## INPUT SPECIFICATIONS

| | |
|---|---|
| Input Voltage Range | 110V .....43-160V |
| Input Surge Voltage (100ms max.) | 110V .....180Vdc max. |
| Under voltage lockout | 110Vin power up ..... 42V |
| | 110Vin power down ..... 40V |
| Remote ON/OFF | See note 4 |

## OUTPUT SPECIFICATIONS

| | |
|---|---|
| Voltage Accuracy: | ±1.0% max. |
| Transient Response: 25% Step Load Change | <500us |
| Trim Adj. Range (By VR) | ±10% |
| Ripple & Noise, 20MHz BW | |
| 12V | 60 mV RMS, 120mV pk-pk max. |
| 24V | 100mV RMS, 240mV pk-pk max. |
| 28V | 100mV RMS, 280mV pk-pk max. |
| 48V | 200mV RMS, 480mV pk-pk max. |
| Temperature Coefficient | ±0.03%/°C max. |
| Short Circuit Protection | Continuous |
| Line Regulation (note 1) | ±0.2% max. |
| Load Regulation (note 2) | ±2.0% max. |
| Over Voltage Protection trip Range, % Vo nom. | 115-140% |
| Current Limit | 105%-140% Nominal Output |
| Auxiliary Output Voltage/Current | 10±3Vdc/20mA max. |
| Load Share Accuracy | ±10% at 50% to 100% Full Load |
| Start up time | 160ms typ. |

## GENERAL SPECIFICATIONS

| | |
|---|---|
| Efficiency | See Table |
| Isolation Voltage | Input/Output ..... 2250VDC min. |
| | Input/Case ..... 2250VDC min. |
| | Output/Case ..... 1500VDC min. |
| Isolation Resistance | $10^7$ohm min. |
| Isolation Capacitance (DC Module) | 4000pF typ |
| Switching Frequency | 250KHz typ |
| Operating Case Temperature | - 40˚C to +100˚C |
| Storage Temperature | - 40˚C to +105˚C |
| Thermal Shutdown, Case Temperature(DC Module) | 110˚C typ. |
| Humidity | 95% RH max. Non condensing |
| MTBF ... MIL-HDBK-217F, GB, 25˚C, Full Load | 280Khrs typ. |
| Safety | Meets UL60950-1 2nd (Basic cInsulation) |
| EMC | Meets EN50155(EN50121-3-2:2007) |
| | with External Output Filter |
| | Meets EN50155(EN50121-3-2:2015) |
| Shock/Vibration | Meets EN50155(EN61373) |
| Environmental | EN50155(EN60068-2-1,2,30) |
| Case Material | Aluminum |
| Dimensions | 9.45×4.33×1.65 Inches |
| | (240.0×110.0×42.0mm) |
| Weight | 995g |

### NOTE

1. Measured from high line to low line.
2. Measured from full load to zero load
3. Output ripple and noise measured with 1uF ceramic capacitor across output.
4. Suffix "P" to the model number with positive logic remote on/off, standard model is negative logic
5. Input connectors PIN1-5 use DINKLE DT-49-B01W-05 series or equivalent. suitable electric wire: 22-12AWG( IEC 0.5-4mm$^2$ )
6. Output connectors PIN6-11 use DINKLE DT-49-B01W-06 series or equivalent. suitable electric wire: 22-12AWG( IEC 0.5-4mm$^2$ )
7. Connector CN1 wafer with TAIWAN KING PIN TERMINAL 8822-02 series or equivalent
8. Connector CN2 wafer with CHYAO SHIUNN TERMINAL JS-1001-04(K) series or equivalent.
9. Connector CN3 wafer with CHIA-SOON TERMINAL B3B-PH-K-S series or equivalent

# FM SERIES
## 10 AMP & 20 AMP, FILTER MODULE

### Features

- Compact Size 2" x 1", 2" x 1.6"
- PCB Mount
- 10A and 20A Filter Module
- 75VDC Input Voltage Maximum
- Suitable for Use With Half Brick and Quarter Brick Series

### Mechanical Dimensions

NOTE: Pin Size is 0.04 Inch (1.02 mm)DIA
All Dimensions in Inches (mm)
Tolerance Inches: X.XX=±0.02 , X.XXX=±0.010
Millimeters: X.X=±0.5 , X.XX=±0.25

**Typical Common-mode and Differential-mode Loss for FM10-100**

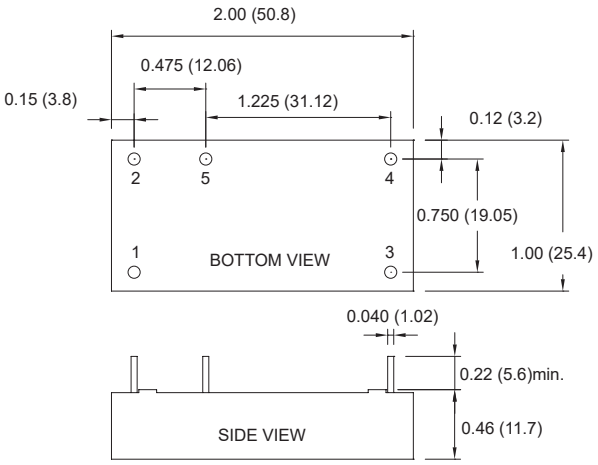


**Typical Common-mode and Differential-mode Loss for FM20-100**

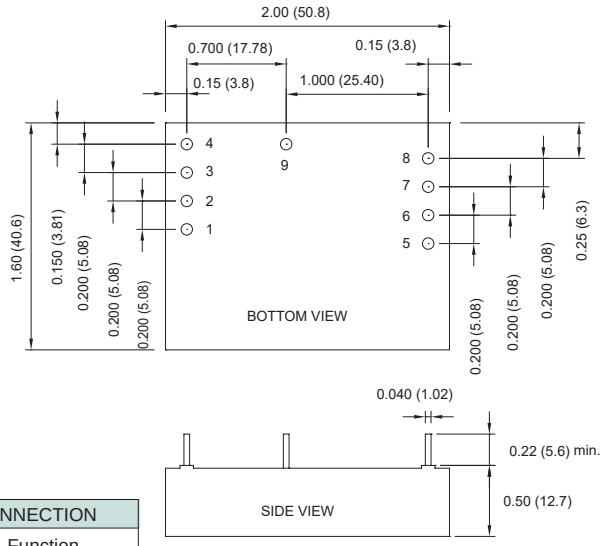


| PIN CONNECTION | |
|---|---|
| PIN | Function |
| 1 | +V Input |
| 2 | -V Input |
| 3 | +V Output |
| 4 | -V Output |
| 5 | GND |

| PIN CONNECTION | |
|---|---|
| PIN | Function |
| 1,2 | +V Input |
| 3,4 | -V Input |
| 5,6 | +V Output |
| 7,8 | -V Output |
| 9 | GND |

| MODEL NUMBER | INPUT VOLTAGE | INPUT SURGE VOLTAGE | OUTPUT RATED CURRENT | DC RESISTANCE (+Vin to +Vo) | DC RESISTANCE (-Vin to -Vo) |
|---|---|---|---|---|---|
| FM10-100 | 75 VDC max. | 100 VDC max. | 10 A max. | 11.5 mΩ typ. | 4.5 mΩ typ. |
| FM20-100 | 75 VDC max. | 100 VDC max. | 20 A max. | 9.5 mΩ typ. | 5.7 mΩ typ. |

## Derating Curve

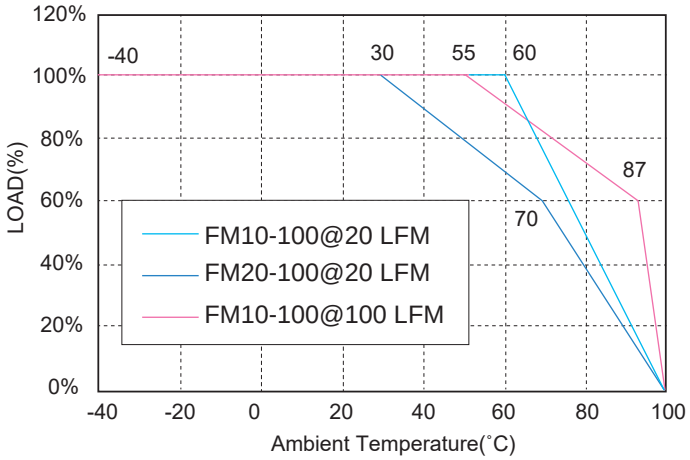


## Specifications

All Specifications Typical At Nominal Line, Full Load, and 25˚C Unless Otherwise Noted

### INPUT SPECIFICATIONS

| | |
|---|---|
| Input Voltage Range | 75Vdc max. |
| Input Surge Voltage | 100Vdc/100ms |
| Input Rated Current | See Table |

**NOTE**

1. Maximum case temperature under any operating condition should not exceed 100˚C.

### GENERAL SPECIFICATIONS

| | |
|---|---|
| Isolation Voltage | Input/GND..... 1500Vdc min.<br>Output/GND.....500Vdc min. |
| Isolation Resistance | $10^7$ ohm min. |
| DC Resistance | See Table |
| Operating Case Temperature Range (note 1) | -40˚C to +100˚C |
| Storage Temperature Range | -55˚C to +105˚C |
| Dimensions: | FM10: 2.00 x 1.00 x 0.46 inches (50.8 x 25.4 x 11.7 mm)<br>FM20: 2.00 x 1.60 x 0.50 inches (50.8 x 40.6 x 12.7 mm) |
| Case Materials | Plastic Case with Epoxy Potting |
| Weight | FM10: 30 g<br>FM20: 55 g |

**Typical Common-mode and Differential-mode Loss for FM10-100**

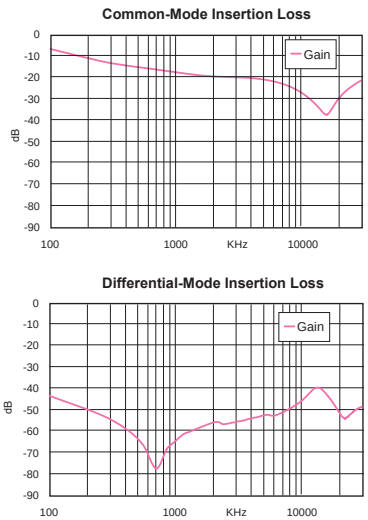


**Typical Common-mode and Differential-mode Loss for FM20-100**

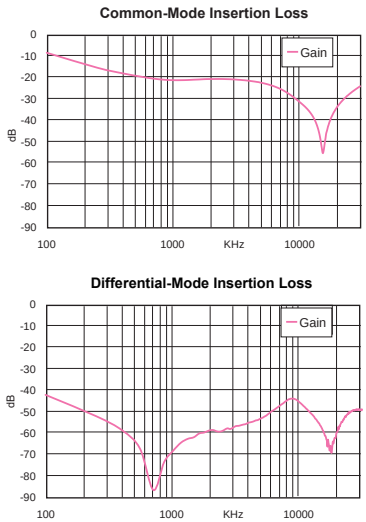

# FM SERIES
## 30 AMP OUTPUT FILTER MODULE

### Features

- Compact Size 2.28”x1.45”
- Quarter-Brick Size
- Six-Sided Shield Metal Case
- PCB Mount
- 30A Filter Module
- 80VDC Input Voltage Maximum
- Suitable for EN50121-3-2:2015 Output Specification
- Fire & Smoke Meets EN45545-2

### Mechanical Dimensions

All Dimensions In Inches[mm]
Tolerance Inches:x.xx= ±0.02, x.xxx= ±0.010
Millimeters:x.x= ±0.5, x.xx=±0.25

BOTTOM VIEW

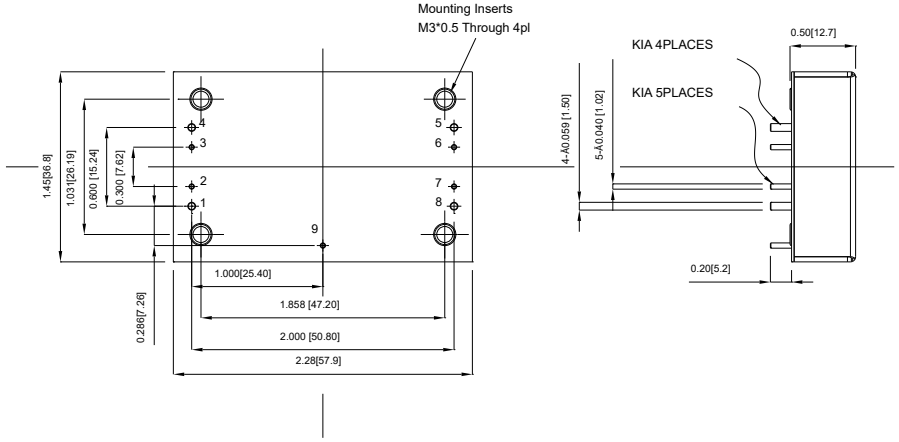


| PIN CONNECTION | |
|---|---|
| PIN | Function |
| 1 | +V Input |
| 2,7 | +Sense |
| 3,6 | -Sense |
| 4 | -V Input |
| 5 | -V Output |
| 8 | +V Output |
| 9 | Case |

| MODEL NUMBER | INPUT VOLTAGE | INPUT SURGE VOLTAGE | OUTPUT RATED CURRENT | DC RESISTANCE (+Vin to +Vo) | DC RESISTANCE (-Vin to –Vo) |
|---|---|---|---|---|---|
| FM30R080P | 80 VDC max. | 100 VDC max. | 30 A max. | 3.0 mΩ typ. | 3.0 mΩ typ. |

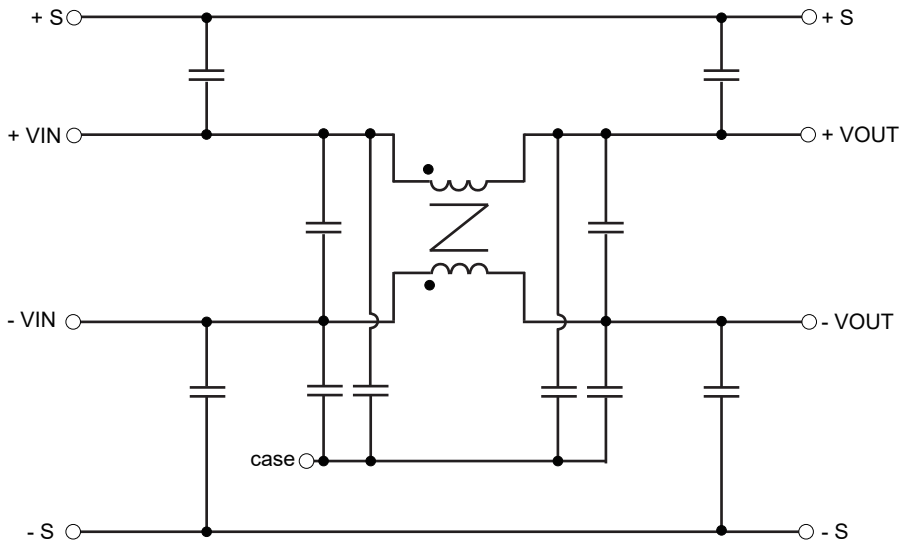


Schematic for FM30R080P Module

## Derating Curve

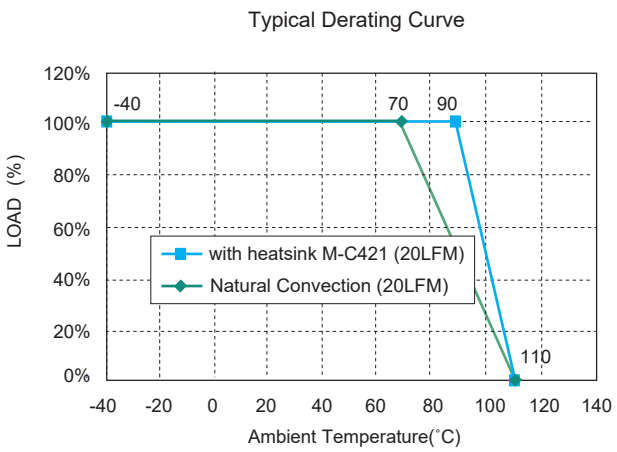


## Specifications

All Specifications Typical At Nominal Line, Full Load, and 25˚C Unless Otherwise Noted

### INPUT SPECIFICATIONS

| | |
|---|---|
| Input Voltage Range | 80Vdc max. |
| Input Surge Voltage | 100Vdc/1s |
| Input Rated Current (note 1) | 30A max. |

### GENERAL SPECIFICATIONS

| | | |
|---|---|---|
| Isolation Voltage | Input/Case/Output/Case | 1000Vdc min. |
| Isolation Resistance | | $10^8$ ohm min. |
| DC Resistance | | See Table |
| Operating Case Temperature Range (note1) | | -40˚C to +110˚C |
| Storage Temperature Range | | -55˚C to +125˚C |
| Dimensions | | 2.28x1.45x0.50inches |
| | | (57.9 x 36.8 x 12.7 mm) |
| Case Material | | Aluminum with Non-Conducted Base |
| Weight | | 60 g |

### NOTE

NOTE :
1. Maximum case temperature under any operating condition should not exceed 110˚C.

### Typical Common-mode Loss for FM30R080P

### Typical Differential-mode Loss for FM30R080P

# FM10D200P SERIES
## 10 AMP FILTER MODULE

### Features

- Half Brick Size Meet Industrial Standard
- PCB Mount
- 10A Filter Module
- 200VDC Input Voltage Maximum
- All capacitor are multi-layer ceramic
- Fire & Smoke Meets EN45545-2

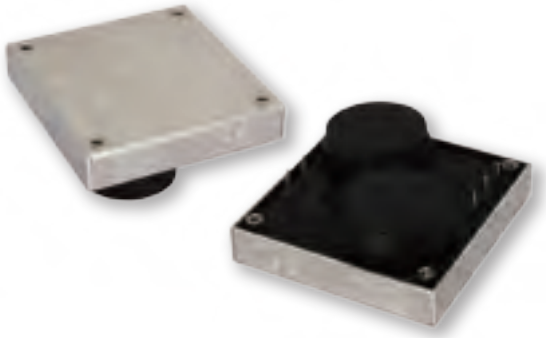

### Mechanical Dimensions

NOTE:Pin Size is 0.04±0.004 Inch (1.0±0.1mm) DIA
All Dimensions In Inches[mm]
Tolerance Inches:x.xx= ± 0.02 ,x.xxx= ± 0.010
Millimeters: x.x = ± 0.5 ,x.xx = ± 0.25

| PIN CONNECTION | |
|---|---|
| PIN | Function |
| 1 | +V Input |
| 2 | -V Input |
| 3 | CASE |
| 4 | -V Output |
| 5 | +V Output |

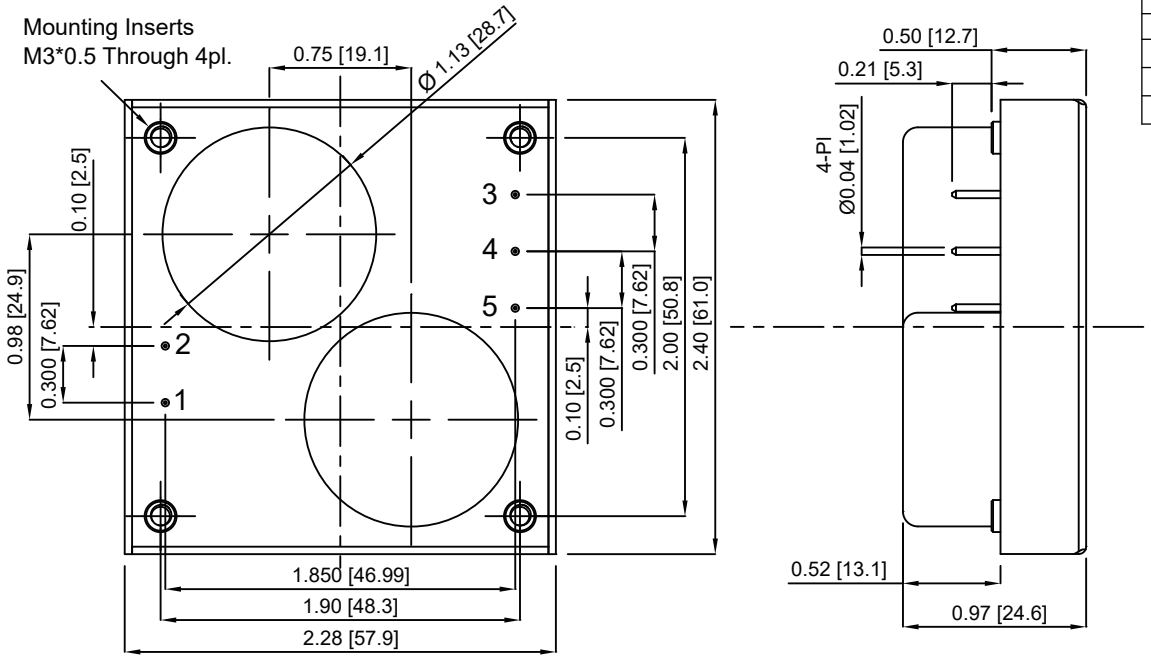


| MODEL NUMBER | INPUT VOLTAGE | INPUT SURGE VOLTAGE | OUTPUT RATED CURRENT | DC RESISTANCE (+Vin to +Vo) | DC RESISTANCE (-Vin to -Vo) |
|---|---|---|---|---|---|
| FM10D200P | 200 VDC max | 250 VDC max | 10 A max. | 50 mΩ typ. | 50 mΩ typ. |

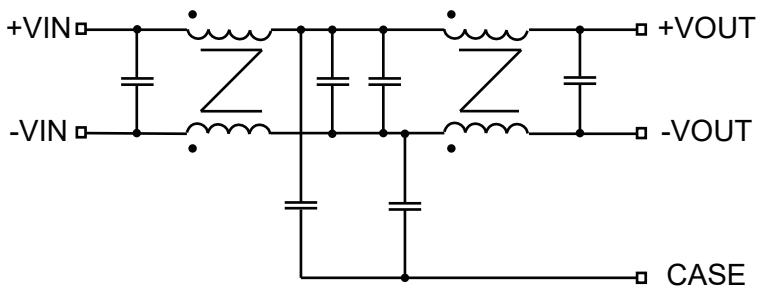


Figure1 Internal Schematic for FM10D200P Module

## Derating Curve

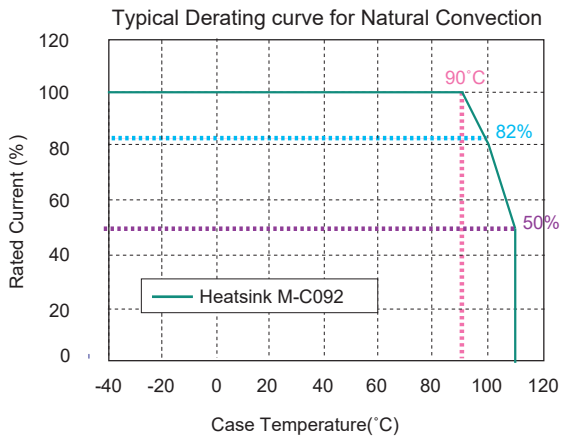


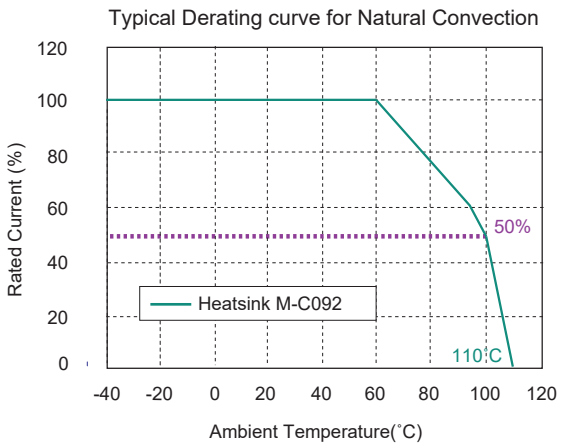


## Specifications

All Specifications Typical At Nominal Line, Full Load, and 25˚C Unless Otherwise Noted

### INPUT SPECIFICATIONS

| | |
|---|---|
| Input Voltage Range | 200Vdc max. |
| Input Surge Voltage | 250Vdc/1s |
| Input Rated Current (note 1) | 10A max |

### GENERAL SPECIFICATIONS

| | |
|---|---|
| Isolation Voltage | Input/Case ..... 3000Vdc min |
| Isolation Voltage | Output/Case ..... 3000Vdc min. |
| Isolation Resistance | $10^8$ ohm min. |
| DC Resistance | See Table |
| Operating Case Temperature Range (note1) | -40˚C to +110˚C |
| Storage Temperature Range | -55˚C to +105˚C |
| Dimensions | 2.28x2.40x0.97 inches (57.9x 61x24.6 mm) |
| Case Material | Aluminum Case with Silicone Potting |
| Weight | 128 g |

### NOTE

1. Maximum case temperature under any operating condition should refer derating curve

Common-mode Insertion Loss

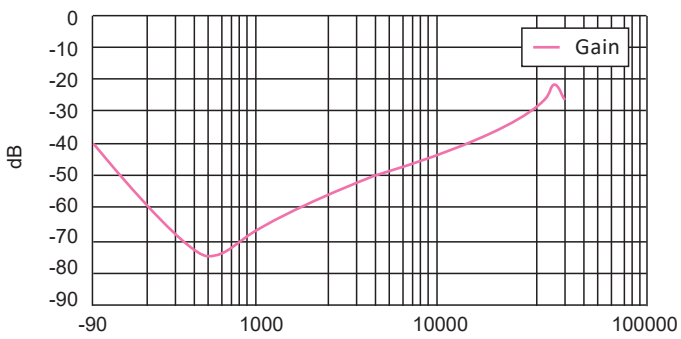


Differential-mode Insertion Loss

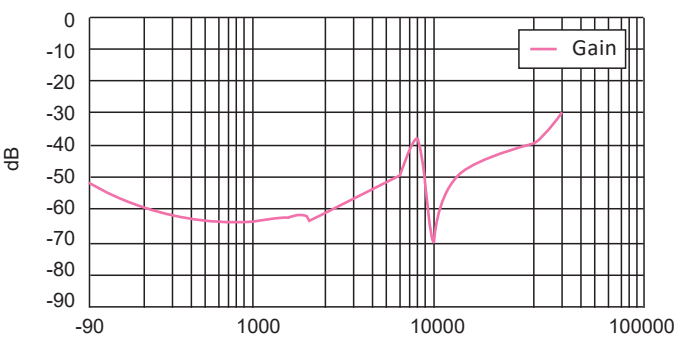


Typicl Common-mode and Differential-mode Loss for FM10D200P

# HEATSINK KIT for DC/DC CONVERTERS

## Features

- Constructed of aluminum AL6063 for optimum heat transfer
- Designed specifically for DC/DC Converters and other baseplate packages
- Finished with black anodize plating
- Mounting hardware and thermal pad are available

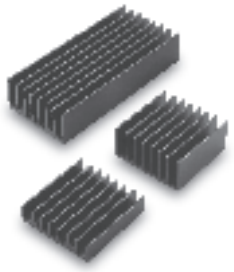

| DC/DC PACKAGE | FIN STYLE | HEATSINK HEIGH (mm) | PART NUMBER | | | THERMAL RESISTANCE (C/W) | | | | |
|---|---|---|---|---|---|---|---|---|---|---|
| | | | HEATSINK | THERMAL PAD | MOUNTING HARDWARE | NATURAL CONVECTION | 100 LFM | 200 LFM | 300 LFM | 400 LFM |
| SB 1"x1" | Cross Cut | 10.0 | SBC100 (K-C087) | N/A ^7 | CLIP HC01 | 12.5 | -- | -- | -- | -- |
| B 2"x1" | Cross Cut | 10.0 | BC100 (K-C088) | N/A ^7 | CLIP HC01 | 10.2 | -- | -- | -- | -- |
| LB 2.05"x1.2" | Transverse | 12.7 | LBT127 (M-C655) | PL01 | K258W (NOTES 5) | 8.99 | 3.29 | 2.73 | 2.40 | 2.10 |
| Quarter Brick | Longitudinal | 12.7 | QBL127 (M-C448) | PQ01 | K308W (NOTES 5) | 5.61 | 4.01 | 3.39 | 2.86 | 2.49 |
| | Transverse | 21 | QBT210 (M-C421) | | | 4.78 | 2.44 | 2.06 | 1.76 | 1.58 |
| Half Brick | Longitudinal | 21 | HBL210 (M-C308) | PH01 | K310W (NOTES 5) | 3.9 | 1.74 | 1.33 | 1.12 | 0.97 |
| | Transverse | 12.7 | HBT127 (M-C091) | | | 4.7 | 2.89 | 2.3 | 1.88 | 1.59 |
| | Transverse | 25.4 | HBT254 (M-C092) | | | 3.0 | 1.44 | 1.17 | 1.04 | 0.95 |
| Full Brick | Longitudinal | 25.4 | FBL254 (M-B012) | PF01 | K320W (NOTES 5) | 2.4 | 1.76 | 1.17 | 1.0 | 0.83 |
| | Longitudinal | 25.4 | FBL254T ^1 (M-C997) | | K320N (NOTES 5) | 2.4 | 1.76 | 1.17 | 1.0 | 0.83 |

NOTES:
1. With threaded mounting hole
2. Example Part Numbers:
   QBL127: Quarter Brick Heatsink (12.7mm High), plate fin (longitudinal)
   FBL254PF01: Full Brick Heatsink (25.4mm High), plate fin (longitudinal) with thermal interface pad
   HBT127PH01K308W: Half Brick Heatsink (12.7mm High), plate fin (transverse) with thermal interface pad and 4 pieces of M3 x 8mm screws & spring washers
   HBL210K308W: Half Brick Heatsink (21.0mm High), plate fin (longitudinal) with 4 pieces of M3 x 8mm screws & spring washers
3. Thermal data provided are for reference only. Actual cooling performance may vary by application.
4. Specifcations are subject to change without notice.
5. K258W: Screw set M2.5*8mm screw & lock washer x 2pcs K308W : Screw set M3*8mm screw with spring washer x 4pcs
   K310W: Screw set M3*10mm screw with spring washer x 4pcs K320W : Screw set M3*20mm screw & spring washer x 4pcs
   K320N: Screw set M3*20mm screw & lock screw nut x 4pcs
6. For volume orders, converters will be supplied with heat-sink already mounted. Separate heatsinks are only available for prototypes and small quantity orders.
7. Applying proper thermal paste is recommended.

## Quarter Brick Heatsink

**Heat Sink: QBT210 (M-C421) Transverse Fins**
Thermal Pad: PQ01 35.8*56.9*0.25 mm
Screw Set: K308W SMP+SW M3*8mm
All Dimensions in mm

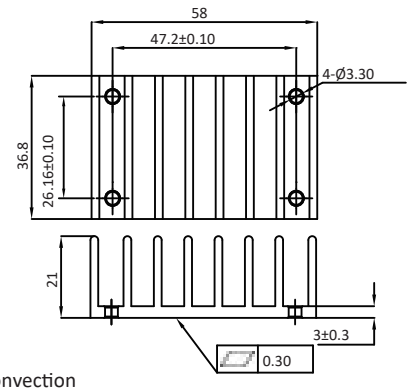


Rca: 4.78°C/W (typ.), at natural convection
2.44°C/W (typ.), at 100LFM
2.06°C/W (typ.), at 200LFM
1.76°C/W (typ.), at 300LFM
1.58°C/W (typ.), at 400LFM

**Heat Sink: QBL127 (M-C448) Longitudinal Fins**
Thermal Pad: PQ01 35.8*56.9*0.25 mm
Screw Set: K308W SMP+SW M3*8mm
All Dimensions in mm

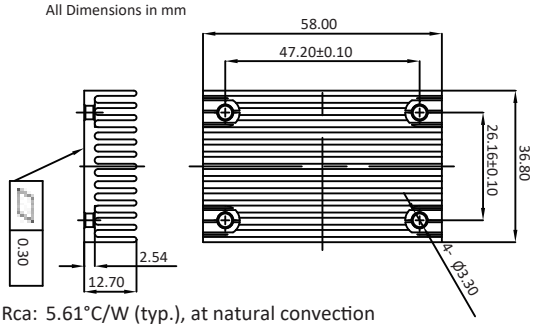


Rca: 5.61°C/W (typ.), at natural convection
4.01°C/W (typ.), at 100LFM
3.39°C/W (typ.), at 200LFM
2.86°C/W (typ.), at 300LFM
2.49°C/W (typ.), at 400LFM

## Full Brick Heatsink

**Heat Sink: FBL254 (M-B012) Longitudinal Fins**
Thermal Pad: PF01 60*115.8*0.25mm
Screw Set: K320N M3*20mm + Nut NH+WOM3*P0.5N
Clear Mounting Inserts Φ3.3mm Through
All Dimensions in mm

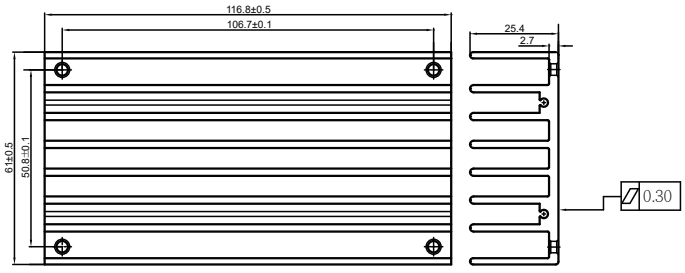


Rca: 2.4°C/W (typ.), at natural convection
1.76°C/W (typ.), at 100LFM,
1.17°C/W (typ.), at 200LFM
1.00°C/W (typ.), at 300LFM
0.83°C/W (typ.), at 400LFM

**Heat Sink: FBL254T(M-C997) Longitudinal Fins**
Thermal Pad: PF01 60*115.8*0.25
Screw Set: K320W M3*20mm+Washer WS3.2N
Mounting Inserts M3*0.5 Through
All Dimensions in mm

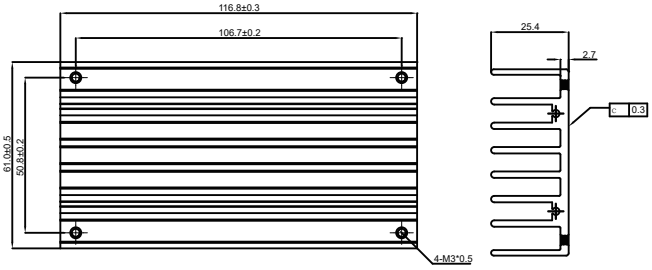


## Half Brick Heatsink

**Heat Sink: HBL210 (M-C308) Longitudinal Fins**
Thermal Pad: PH01 56.9*60*0.25 mm
Screw Set: K308W SMP+SW M3*8mm
All Dimensions in mm

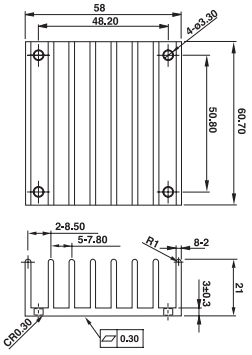


Rca:
3.9°C/W (typ.), at natural convection
1.74°C/W (typ.), at 100LFM
1.33°C/W (typ.), at 200LFM
1.12°C/W (typ.), at 300LFM
0.97 °C/W (typ.), at 400LFM

**Heat Sink: HBT127 (M-C091) Transverse Fins**
Thermal Pad: PH01 56.9*60*0.25 mm
Screw Set: K308W SMP+SW M3*8mm
All Dimensions in mm

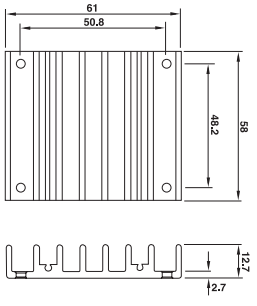


Rca:
4.7°C/W (typ.), at natural convection
2.89°C/W (typ.), at 100LFM
2.30°C/W (typ.), at 200LFM
1.88°C/W (typ.), at 300LFM
1.59°C/W (typ.), at 400LFM

**Heat Sink: HBT254 (M-C092) Transverse Fins**
Thermal Pad: PH01 56.9*60*0.25 mm
Screw Set: K308W SMP+SW M3*8mm
All Dimensions in mm

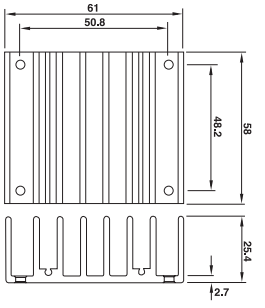


Rca:
3°C/W (typ.), at natural convection
1.44°C/W (typ.), at 100LFM
1.17°C/W (typ.), at 200LFM
1.04°C/W (typ.), at 300LFM
0.95°C/W (typ.), at 400LFM

## SB CASE Heatsink

Heat Sink: SBC100
Clip: HC01
All Dimensions in mm

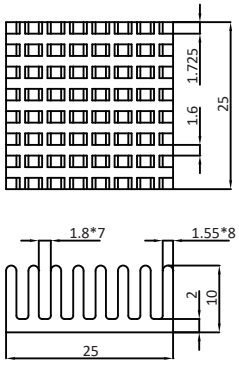


Rca:
12.5°C/W (typ.), at natural convection

## B CASE Heatsink

Heat Sink: BC100
Clip: HC01
All Dimensions in mm

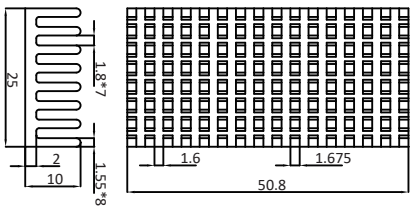


Rca:
10.2°C/W (typ.), at natural convection

## LB CASE Heatsink

**Heat Sink: LBT127 (M-C655) Transverse Fins**
Thermal Pad: PL01 29.5*49.8*0.25mm
Screw Set: K258W M2.5*8mm+Lock Washer
All Dimensions in mm

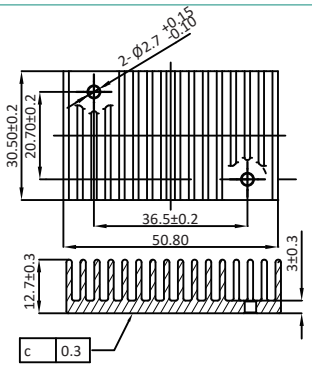


Rca:
8.99°C/W (typ.), at natural convection
3.29°C/W (typ.), at 100LFM
2.73°C/W (typ.), at 200LFM
2.40°C/W (typ.), at 300LFM
2.10°C/W (typ.), at 400LFM

# SIPSMT05-05 SERIES
## 5 AMP, POL CONVERTERS

## Features

- Non-Isolated POL Converter
- SIP / SMT Package
- Output Current 5AMP
- Input Voltage Range 3.0-5.5VDC
- Output Voltage Range 0.75-3.63VDC
- High Efficiency to 94%
- Over Temperature Protection
- Continuous Short Circuit Protection
- Remote On/Off
- UL/C-UL60950 Certified

c UL us
E176177

## Mechanical Dimensions

Mechanical Specification
All Dimensions In Inches (mm)
Tolerances Inches: X.XX= ±0.02 , X.XXX= ±0.010
Millimeters: X.X= ±0.5 , X.XX=±0.25

### SIP Packages

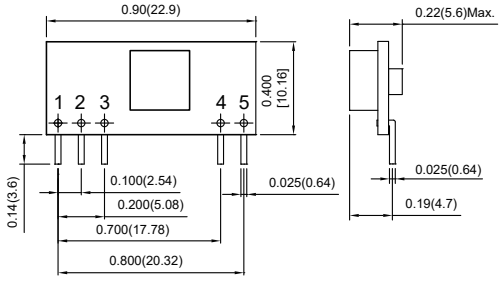


| PIN CONNECTION | |
|---|---|
| PIN | Function |
| 1 | +Output |
| 2 | Trim |
| 3 | Common |
| 4 | +V Input |
| 5 | On/Off |

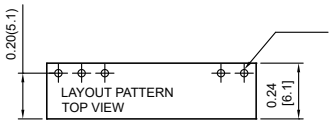


1.1mm PLATED THROUGH HOLE
1.6mm PAD SIZE

### SMT Packages

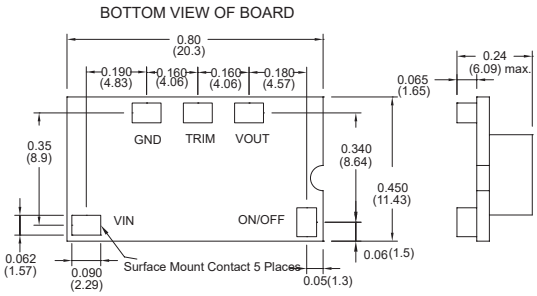


| MODEL NUMBER | INPUT VOLTAGE | OUTPUT VOLTAGE | OUTPUT CURRENT | INPUT CURRENT | | Efficiency (%) |
|---|---|---|---|---|---|---|
| | | | | NO LOAD | FULL LOAD | |
| | 3.0-5.5 VDC | 0.75 VDC | 5 A | 25 mA | 949 mA | 79 |
| | 3.0-5.5 VDC | 1.2 VDC | 5 A | 30 mA | 1412 mA | 85 |
| SIP05-05S33A | 3.0-5.5 VDC | 1.5 VDC | 5 A | 30 mA | 1724 mA | 87 |
| | 3.0-5.5 VDC | 1.8 VDC | 5 A | 35 mA | 2022 mA | 89 |
| SMT05-05S33A | 3.0-5.5 VDC | 2.0 VDC | 5 A | 35 mA | 2222 mA | 90 |
| | 3.0-5.5 VDC | 2.5 VDC | 5 A | 35 mA | 2217 mA | 92 |
| | 4.5-5.5 VDC | 3.3 VDC | 5 A | 35 mA | 3511 mA | 94 |

NOTE: Nominal Input Voltage 5.0VDC

## Derating Curve

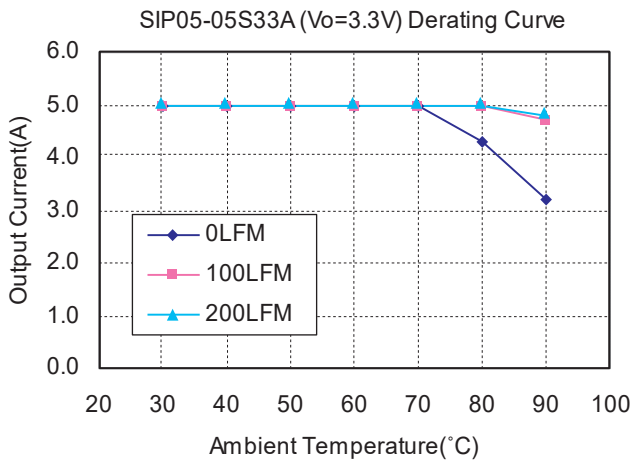


Figure2. Typical Power De-rating for 5V IN 3.3Vout

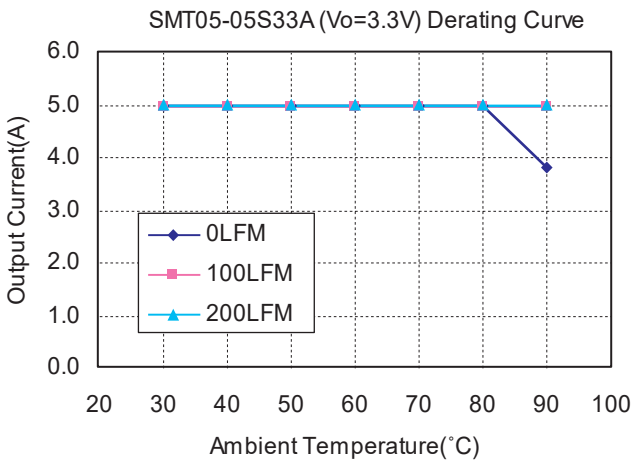


Figure3. Typical Power De-rating for 5V IN 3.3Vout

## Specifications

All Specifications Typical At Nominal Line, Full Load, and 25˚C Unless Otherwise Noted

### INPUT SPECIFICATIONS

| | |
|---|---|
| Input Voltage Range | Vo, set ≦ Vin-0.5VDC |
| | 5V ..... 3.0 – 5.5V |
| Under Voltage Lock-out | Power up ..... 2.0V typ. |
| | Power down .....1.9V typ. |
| Input Filter Type | Capacitive |
| Positive Remote On/Off Control: | |
| Module On | Open Circuit or = Vin |
| Module Off | <0.4Vdc |

### OUTPUT SPECIFICATIONS

| | |
|---|---|
| Voltage Accuracy | ±1.5% max. |
| Transient Response: 50% Step Load Change | < 200µs |
| Ripple and Noise, 20MHz BW (note 3) | 20mVrms max. |
| | 50mVpk-pk max. |
| Temperature Coefficient | ±0.03%/˚C max. |
| Short Circuit Protection | Continuous |
| Line Regulation (note 1) | ±0.4% max. |
| Load Regulation (note 2) | ±0.5% max. |
| Capacitive Load Low ESR | 3000µF max. |
| External Trim Adj. Range (see Table 1) | Vo=0.75- 3.63Vdc |
| Start up time | 6.5ms typ. |

### GENERAL SPECIFICATIONS

| | |
|---|---|
| Efficiency | See Table |
| Isolation Voltage | Non-isolation |
| Switching Frequency | 300KHz typ. |
| Over Temperature Protection | 120˚C typ. |
| Operating Ambient Temperature Range | -40˚C to +85˚C |
| Power Derating Curve | see Figure2, 3 |
| Storage Temperature Range | -55˚C to +125˚C |
| MTBF ..... MIL-STD-217F, GB, 25˚C, Full Load | 1.5Mhrs typ. |
| Dimensions: | SIP Package: 0.90 x 0.400 x 0.22 inches (22.9 x 10.16 x 5.6 mm) |
| | SMT Package:0.80 x 0.450 x 0.24 inches (20.3 x 11.43 x 6.09 mm) |
| Structure | Non-potted With Open Frame Type |
| Weight | 2.3 g |

### NOTE

1. Measured from high line to low line, Vo, set=1.8VDC.
2. Measured from full load to zero load, Vo, set=3.3VDC.
3. The output noise is measured with 10µf tantalum capacitor and 1µf ceramic capacitor across output.
4. The input terminal recommend to parallel with 100µF capacitor ESR< 100mΩ to reduce the input ripple voltage.
5. Suffix "N" to the model number with negative logic remote On/Off
   Model On ..... open circuit or < 0.4VDC
   Module Off ..... >+2.8VDC to Vin

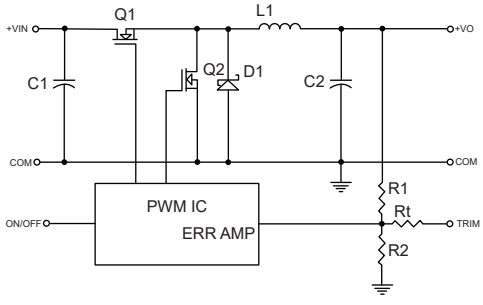


Figure 1.Simplified Schematic

| Vo,set(V) | Rtrim (K˜) |
|---|---|
| 0.75 | Open |
| 1.2 | 41.71 |
| 1.5 | 22.98 |
| 1.8 | 14.96 |
| 2.0 | 11.75 |
| 2.5 | 3.93 |
| 3.3 | 3.15 |
| 3.63 | 2.20 |

Table 1.External Resistor Values for programming out voltage

# SIPSMT05-12 SERIES
## 5 AMP, POL CONVERTERS

## Features

- Non-isolated POL Converter
- SIP / SMT Package
- Output Current 5AMP
- Input Voltage Range 8.3-14VDC
- Output Voltage Range 0.75-5VDC
- High Efficiency to 92%
- Over Temperature Protection
- Continuous Short Circuit Protection
- Remote ON/OFF Control
- UL/C-UL60950 Certified

c UL us
E176177

## Mechanical Dimensions

Mechanical Specification
All Dimensions In Inches (mm)
Tolerances Inches: X.XX= ±0.02 , X.XXX= ±0.010
Millimeters: X.X= ±0.5 , X.XX=±0.25

### SIP Packages

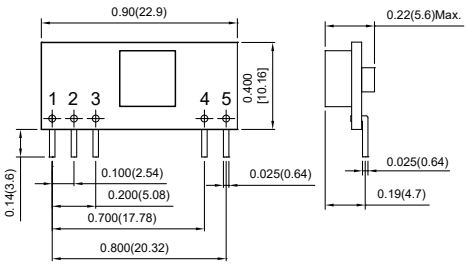


| PIN CONNECTION | |
|---|---|
| PIN | Function |
| 1 | +Output |
| 2 | Trim |
| 3 | Common |
| 4 | +V Input |
| 5 | On/Off |

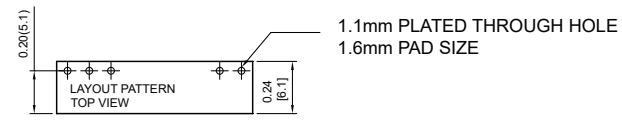


### SMT Packages

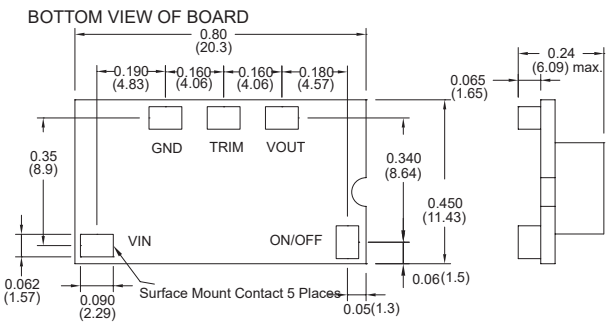


| MODEL NUMBER | INPUT VOLTAGE | OUTPUT VOLTAGE | OUTPUT CURRENT | INPUT CURRENT | | Efficiency (%) |
|---|---|---|---|---|---|---|
| | | | | NO LOAD | FULL LOAD | |
| | 8.3-14 VDC | 0.75 VDC | 5 A | 20 mA | 428 mA | 73 |
| | 8.3-14 VDC | 1.2 VDC | 5 A | 25 mA | 625 mA | 80 |
| SIP05-12S05A | 8.3-14 VDC | 1.5 VDC | 5 A | 25 mA | 762 mA | 82 |
| | 8.3-14 VDC | 1.8 VDC | 5 A | 30 mA | 893 mA | 84 |
| SMT05-12S05A | 8.3-14 VDC | 2.0 VDC | 5 A | 30 mA | 980 mA | 85 |
| | 8.3-14 VDC | 2.5 VDC | 5 A | 35 mA | 1197 mA | 87 |
| | 8.3-14 VDC | 3.3 VDC | 5 A | 45 mA | 1545 mA | 89 |
| | 8.3-14 VDC | 5.0 VDC | 5 A | 50 mA | 2264 mA | 92 |

NOTE: Nominal Input Voltage 12VDC

## Derating Curve

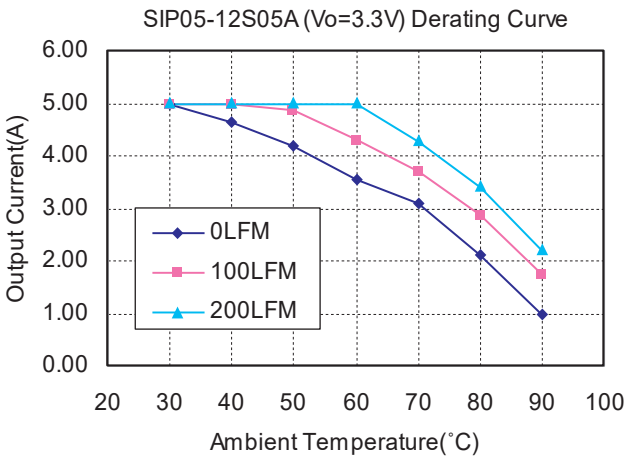


Figure2. Typical Power De-rating for 12V IN 3.3Vout

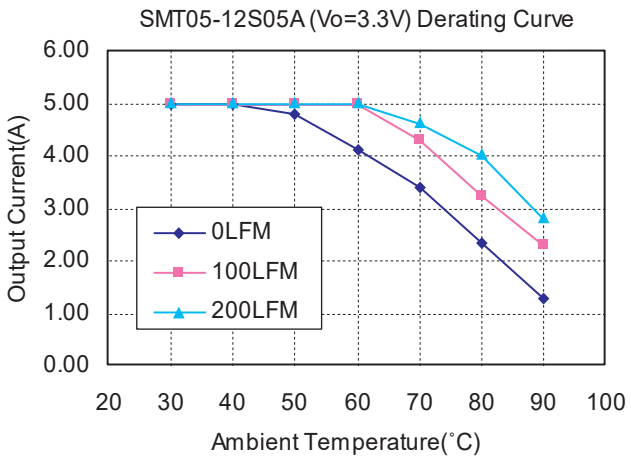


Figure3. Typical Power De-rating for 12V IN 3.3Vout

## Specifications

All Specifications Typical At Nominal Line, Full Load, and 25˚C Unless Otherwise Noted

### INPUT SPECIFICATIONS

| | |
|---|---|
| Input Voltage Range | 12V ..... 8.3-14V |
| Under Voltage Lock-out | Power up ..... 8.0V typ. |
| | Power down ..... 7.9V typ. |
| Input Filter Type | Capacitive |
| Positive Remote On/Off Control: | |
| Module On | Open Circuit or = Vin |
| Module Off | <0.4Vdc |

### OUTPUT SPECIFICATIONS

| | |
|---|---|
| Voltage Accuracy | ±1.5% max. |
| Transient Response: 50% Step Load Change | < 200µs |
| Ripple and Noise, 20MHz BW (note 3) | 20mVrms, 50mVpk-pk max. |
| | Vo=5Vdc ..... 45mVrms, |
| | 75mVpk-pk max. |
| Temperature Coefficient | ±0.03%/˚C max. |
| Short Circuit Protection | Continuous |
| Line Regulation (note 1) | ±0.2% max. |
| Load Regulation (note 2) | ±0.5% max. |
| Capacitive Load Low ESR | 3000µF max. |
| External Trim Adj. Range (see Table1) | Vo=0.75-5.0Vdc |
| Start up time | 7ms typ. |

### GENERAL SPECIFICATIONS

| | |
|---|---|
| Efficiency | See Table |
| Isolation Voltage | Non-isolation |
| Switching Frequency | 300KHz typ. |
| Over Temperature Protection | 120˚C typ. |
| Operating Ambient Temperature Range | -40˚C to +85˚C |
| Power De-rating Curve | see Figure2, 3 |
| Storage Temperature Range | -55˚C to +125˚C |
| MTBF ..... MIL-STD-217F, GB, 25˚C, Full Load | 1.5Mhrs typ. |
| Dimensions: | SIP Package: 0.90 x 0.400 x 0.22 inches |
| | (22.9 x 10.16 x 5.6 mm) |
| | SMT Package:0.80 x 0.450 x 0.24 inches |
| | (20.3 x 11.43 x 6.09 mm) |
| Structure | Non-potted With Open Frame Type |
| Weight | 2.3 g |

### NOTE

1. Measured from high line to low line, Vo, set=1.8VDC.
2. Measured from full load to zero load, Vo, set=3.3VDC.
3. The output noise is measured with 10µf tantalum capacitor and 1µf ceramic capacitor across output.
4. The input terminal recommend to parallel with 100µF capacitor ESR< 100mΩ to reduce the input ripple voltage
5. Suffix "N" to the model number with negative logic remote On/Off
   Model On ..... open circuit or < 0.4VDC
   Module Off ..... >+2.8VDC to Vin

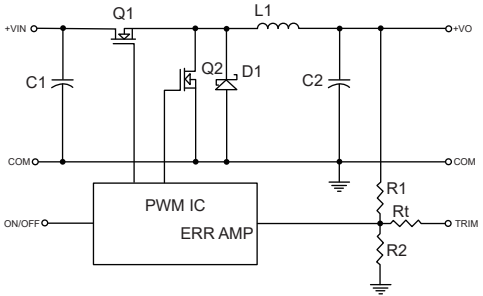


Figure 1.Simplified Schematic

| Vo,set(V) | Rtrim (K˜) |
|---|---|
| 0.75 | Open |
| 1.2 | 22.33 |
| 1.5 | 13.0 |
| 1.8 | 9.0 |
| 2.0 | 7.4 |
| 2.5 | 5.6 |
| 3.2 | 3.12 |
| 5.0 | 1.47 |

Table 1.External Resistor Values for programming out voltage

# SIPSMT10-05 SERIES
## 10 AMP, POL CONVERTERS

## Features

- Non-isolated POL converter
- SIP / SMT Package
- Output Current 10AMP
- Input Voltage Range 3-5.5VDC
- 300KHz Switching Frequency
- High Efficiency to 95%
- Over Temperature Protection
- Continuous Short Circuit Protection
- Remote On/Off Control
- UL/C-UL60950 Certified

E176177

## Mechanical Dimensions

Mechanical Specification
All Dimensions In Inches (mm)
Tolerances Inches: X.XX= ±0.02 , X.XXX= ±0.010
Millimeters: X.X= ±0.5 , X.XX=±0.25

### SIP Packages

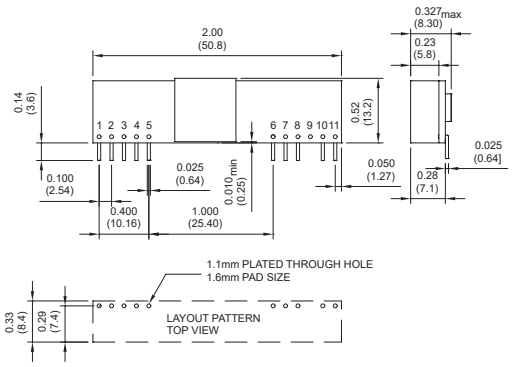


| PIN CONNECTION | |
|---|---|
| PIN | Function |
| 1 | +Output |
| 2 | +Output |
| 3 | +Sense |
| 4 | +Output |
| 5 | Common |
| 6 | Common |
| 7 | +V Input |
| 8 | +V Input |
| 9 | No Pin |
| 10 | Trim |
| 11 | On/Off Control |

### SMT Packages

Bottom View of Board

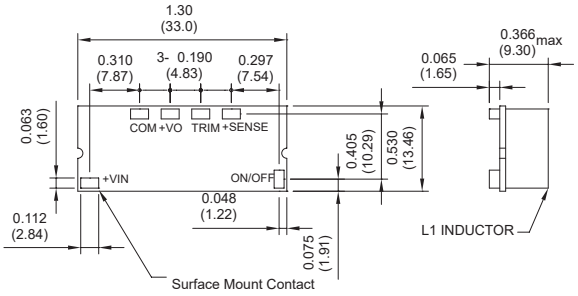


| MODEL NUMBER | INPUT VOLTAGE | OUTPUT VOLTAGE | OUTPUT CURRENT | INPUT CURRENT | | Efficiency (%) |
|---|---|---|---|---|---|---|
| | | | | NO LOAD | FULL LOAD | |
| SIP10-05S10 | 3.0-5.5 VDC | 1.0 VDC | 10 A | 50 mA | 2353 mA | 85 |
| SMT10-05S10 | 3.0-5.5 VDC | 1.0 VDC | 10 A | 50 mA | 2353 mA | 85 |
| SIP10-05S12 | 3.0-5.5 VDC | 1.2 VDC | 10 A | 50 mA | 2791 mA | 86 |
| SMT10-05S12 | 3.0-5.5 VDC | 1.2 VDC | 10 A | 50 mA | 2791 mA | 86 |
| SIP10-05S15 | 3.0-5.5 VDC | 1.5 VDC | 10 A | 50 mA | 3409 mA | 88 |
| SMT10-05S15 | 3.0-5.5 VDC | 1.5 VDC | 10 A | 50 mA | 3409 mA | 88 |
| SIP10-05S18 | 3.0-5.5 VDC | 1.8 VDC | 10 A | 50 mA | 4000 mA | 90 |
| SMT10-05S18 | 3.0-5.5 VDC | 1.8 VDC | 10 A | 50 mA | 4000 mA | 90 |
| SIP10-05S20 | 3.0-5.5 VDC | 2.0 VDC | 10 A | 60 mA | 4396 mA | 91 |
| SMT10-05S20 | 3.0-5.5 VDC | 2.0 VDC | 10 A | 60 mA | 4396 mA | 91 |
| SIP10-05S25 | 3.0-5.5 VDC | 2.5 VDC | 10 A | 60 mA | 5376 mA | 93 |
| SMT10-05S25 | 3.0-5.5 VDC | 2.5 VDC | 10 A | 60 mA | 5376 mA | 93 |
| SIP10-05S33 | 4.5-5.5 VDC | 3.3 VDC | 10 A | 60 mA | 6947 mA | 95 |
| SMT10-05S33 | 4.5-5.5 VDC | 3.3 VDC | 10 A | 60 mA | 6947 mA | 95 |

NOTE: Nominal Input Voltage 5.0VDC

## Derating Curve

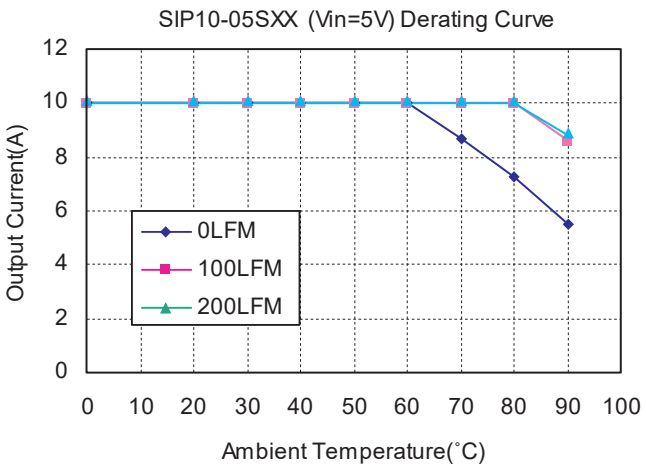


Figure2. Typical Power De-rating for 5Vin

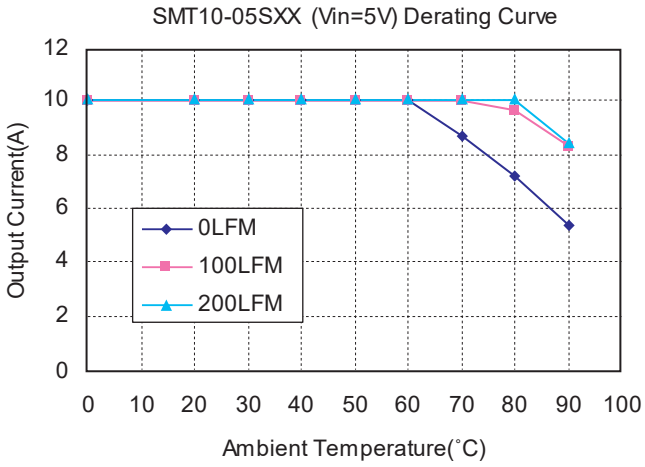


Figure3. Typical Power De-rating for 5Vin

## Specifications

All Specifications Typical At Nominal Line, Full Load, and 25˚C Unless Otherwise Noted

### INPUT SPECIFICATIONS

| | |
|---|---|
| Input Voltage Range | 5V ..... 3.0-5.5V |
| | 5V ..... 4.5-5.5V |
| Under Voltage Lock-out | Power up ..... 2.8V typ. |
| | Power down .....2.7V typ. |
| Input Filter Type | Capacitive |
| Positive Remote On/Off Control: | |
| Module On | Open Circuit or = Vin |
| Module Off | 0 to <0.4Vdc |

### OUTPUT SPECIFICATIONS

| | |
|---|---|
| Voltage Accuracy | ±1.5% max. |
| Transient Response: 25% Step Load Change | < 200µs |
| Ripple and Noise, 20MHz BW (note3) | 20mVrms max. |
| | 50mVpk-pk max. |
| Temperature Coefficient | ±0.03%/˚C max. |
| Short Circuit Protection | Continuous |
| Line Regulation (note1) | ±0.2% max. |
| Load Regulation (note2) | ±0.5% max. |
| Capacitive Load, Low ESR | 10000µF max. |
| External Trim Adj. Range | ±10% |
| Start up time | 4.5ms typ. |

### GENERAL SPECIFICATIONS

| | |
|---|---|
| Efficiency | See Table |
| Isolation Voltage | Non-isolation |
| Switching Frequency | 300KHz typ. |
| Over Temperature Protection | 120˚C typ. |
| Operating Ambient Temperature Range | -40˚C to +85˚C |
| Power Derating Curve | see Figure2, 3 |
| Storage Temperature Range | -55˚C to +125˚C |
| MTBF ..... MIL-STD-217F, GB, 25˚C, Full Load | 1.5Mhrs typ. |
| Dimensions: | SIP Package: 2.00 x 0.327 x 0.52 inches (50.8 x 8.3 x 13.2 mm) |
| | SMT Package:1.30 x 0.530 x 0.366 inches (33.0x12.46x9.3 mm) |
| Structure | Non-potted With Open Frame Type |
| Weight | 6.8 g |

### NOTE

1. Measured from high line to low line.
2. Measured from full load to zero load.
3. The output noise is measured with 10µf tantalum capacitor and 1µf ceramic capacitor across output.
4. The input terminal recommend to parallel with 100µF capacitor ESR< 20mΩ to reduce the input ripple voltage.
5. Suffix "N" to the model number with negative logic remote On/Off
   Model On ..... open circuit or < 0.4VDC
   Module Off ..... >+2.8VDC to Vin

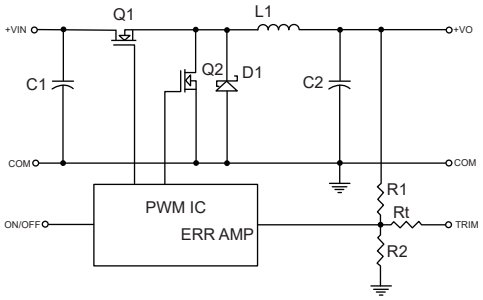


Figure 1.Simplified Schematic

# SIPSMT10-12 SERIES
## 10 AMP, POL CONVERTERS

## Features

- Non-Isolated POL Converter
- SIP / SMT Package
- Output Current 10AMP
- Input Voltage Range 9.0-14VDC
- 300KHz Switching Frequency
- High Efficiency to 95%
- Over Temperature Protection
- Continuous Short Circuit Protection
- Remote ON/OFF Control
- UL/C-UL60950 Certified

c UL us
E176177

## Mechanical Dimensions

Mechanical Specification
All Dimensions In Inches (mm)
Tolerances Inches: X.XX= ±0.02 , X.XXX= ±0.010
Millimeters: X.X= ±0.5 , X.XX=±0.25

### SIP Packages

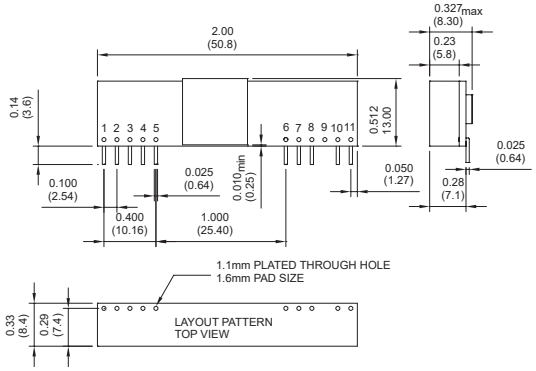


| PIN CONNECTION | |
|---|---|
| PIN | Function |
| 1 | +Output |
| 2 | +Output |
| 3 | +Sense |
| 4 | +Output |
| 5 | Common |
| 6 | Common |
| 7 | +V Input |
| 8 | +V Input |
| 9 | No Pin |
| 10 | Trim |
| 11 | On/Off Control |

### SMT Packages

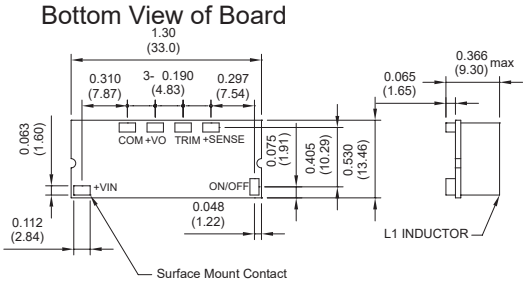


| MODEL NUMBER | INPUT VOLTAGE | OUTPUT VOLTAGE | OUTPUT CURRENT | INPUT CURRENT NO LOAD | INPUT CURRENT FULL LOAD | Efficiency (%) |
|---|---|---|---|---|---|---|
| SIP10-12S10 | 9.0-14 VDC | 1.0 VDC | 10 A | 50 mA | 992 mA | 84 |
| SMT10-12S10 | 9.0-14 VDC | 1.0 VDC | 10 A | 50 mA | 992 mA | 84 |
| SIP10-12S12 | 9.0-14 VDC | 1.2 VDC | 10 A | 50 mA | 1163 mA | 86 |
| SMT10-12S12 | 9.0-14 VDC | 1.2 VDC | 10 A | 50 mA | 1163 mA | 86 |
| SIP10-12S15 | 9.0-14 VDC | 1.5 VDC | 10 A | 50 mA | 1404 mA | 89 |
| SMT10-12S15 | 9.0-14 VDC | 1.5 VDC | 10 A | 50 mA | 1404 mA | 89 |
| SIP10-12S18 | 9.0-14 VDC | 1.8 VDC | 10 A | 60 mA | 1666 mA | 90 |
| SMT10-12S18 | 9.0-14 VDC | 1.8 VDC | 10 A | 60 mA | 1666 mA | 90 |
| SIP10-12S20 | 9.0-14 VDC | 2.0 VDC | 10 A | 60 mA | 1832 mA | 91 |
| SMT10-12S20 | 9.0-14 VDC | 2.0 VDC | 10 A | 60 mA | 1832 mA | 91 |
| SIP10-12S25 | 9.0-14 VDC | 2.5 VDC | 10 A | 60 mA | 2264 mA | 92 |
| SMT10-12S25 | 9.0-14 VDC | 2.5 VDC | 10 A | 60 mA | 2264 mA | 92 |
| SIP10-12S33 | 9.0-14 VDC | 3.3 VDC | 10 A | 70 mA | 2956 mA | 93 |
| SMT10-12S33 | 9.0-14 VDC | 3.3 VDC | 10 A | 70 mA | 2956 mA | 93 |
| SIP10-12S05 | 9.0-14 VDC | 5.0 VDC | 10 A | 70 mA | 4385 mA | 95 |
| SMT10-12S05 | 9.0-14 VDC | 5.0 VDC | 10 A | 70 mA | 4385 mA | 95 |
| SIP10-12S05A | 8.3-14 VDC | 0.75-5 VDC | 10 A | 70 mA | 2956 mA | 93%@3.3V |
| SMT10-12S05A | 8.3-14 VDC | 0.75-5 VDC | 10 A | 70 mA | 2956 mA | 93%@3.3V |

NOTE: Nominal Input Voltage 12VDC

## Derating Curve

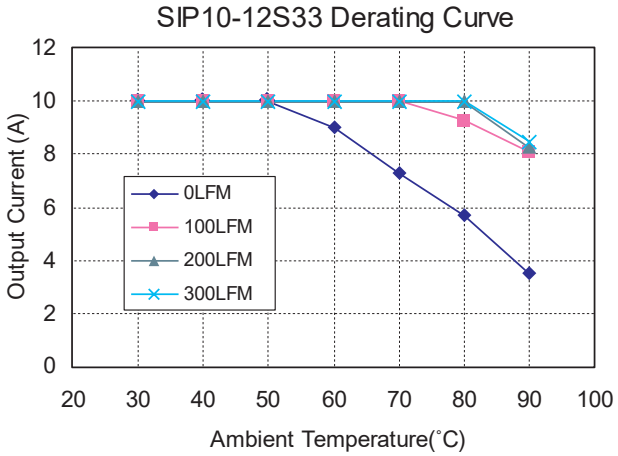


Figure2. Typical Power De-rating for 12Vin

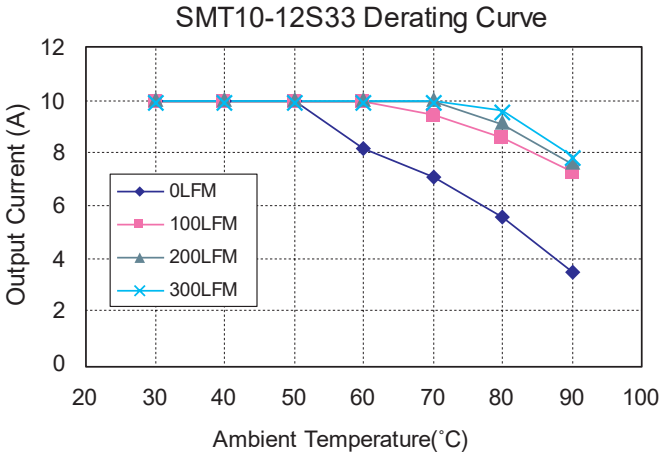


Figure3. Typical Power De-rating for 12Vin

## Specifications

All Specifications Typical At Nominal Line, Full Load, and 25˚C Unless Otherwise Noted

### INPUT SPECIFICATIONS

| | |
|---|---|
| Input Voltage Range | 12V ..... 9.0 – 14V |
| | 12V ..... 8.3 – 14V |
| Under Voltage Lock-out | Power up ..... 8.0V typ. |
| | Power down ..... 7.7V typ. |
| Input Filter Type | Capacitive |
| Positive Remote On/Off Control: | |
| Module On | Open Circuit or =Vin |
| Module Off | < 0.4Vdc |

### OUTPUT SPECIFICATIONS

| | |
|---|---|
| Voltage Accuracy | ±1.5% max. |
| Transient Response: 25% Step Load Change | < 200µs |
| Ripple and Noise, 20MHz BW (note 3) | 20mVrms max. |
| | 50mVpk-pk max. |
| Temperature Coefficient | ±0.03%/˚C max. |
| Short Circuit Protection | Continuous |
| Line Regulation (note 1) | ±0.2% max. |
| Load Regulation (note 2) | ±0.5% max. |
| Capacitive Load Low ESR | 8000µF max. |
| External Trim Adj. Range | ±10% |
| (SIP/SMT10-12S05) | +5%, -10% |
| (SIP/SMT10-12S05A) | 0.75V-5.0V |
| Start up time | 7ms typ. |

### GENERAL SPECIFICATIONS

| | |
|---|---|
| Efficiency | See Table |
| Isolation Voltage | Non-isolation |
| Switching Frequency | 300KHz typ. |
| Over Temperature Protection | 120˚C typ. |
| Operating Ambient Temperature Range | -40˚C to +85˚C |
| Power Derating Curve | see Figure2, 3 |
| Storage Temperature Range | -55˚C to +125˚C |
| MTBF ..... MIL-STD-217F, GB, 25˚C, Full Load | 0.98Mhrs typ. |
| Dimensions: | SIP Package: 2.00 x 0.512 x 0.327inches (50.8 x 13.00 x 8.30 mm) |
| | SMT Package:1.30 x 0.530 x 0.366 inches (33.0 x 13.46 x 9.30 mm) |
| Structure | Non-potted With Open Frame Type |
| Weight | 10 g |

### NOTE

1. Measured from high line to low line.
2. Measured from full load to zero load.
3. The output noise is measured with 10µf tantalum capacitor and 1µf ceramic capacitor across output.
4. The input terminal recommend to parallel with 100µF capacitor ESR< 100mΩ to reduce the input ripple voltage.
5. Suffix "N" to the model number with negative logic remote On/Off
   Model On ..... open circuit or < 0.4VDC
   Module Off ..... >+2.8VDC to Vin

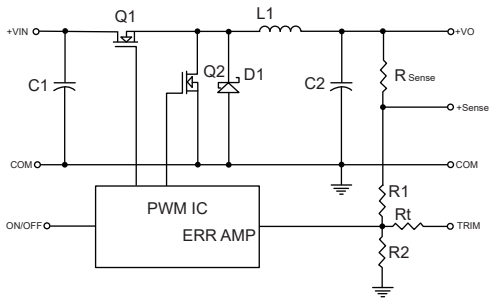


Figure 1.Simplified Schematic

| Vo,set(V) | Rtrim (K˜) |
|---|---|
| 0.7525 | Open |
| 1.2 | 22.46 |
| 1.5 | 13.05 |
| 1.8 | 9.024 |
| 2.0 | 7.417 |
| 2.5 | 5.009 |
| 3.3 | 3.122 |
| 5.0 | 1.472 |

Table 1.External Resistor Values for programming out voltage

# SIPSMT10W-12 SERIES
## 10 AMP, POL CONVERTERS

## Features

- Non-Isolated POL Converter
- SIP / SMT Package
- Output Current 10AMP
- Input Voltage Range 6.0-14VDC
- Output Voltage Range 0.7525-5VDC
- 300KHz Switching Frequency
- High Efficiency to 95%
- Over Temperature Protection
- Continuous Short Circuit Protection
- Remote ON/OFF Control
- Output Voltage Sequencing
- Power Good Signal
- UL/C-UL60950 Certified

c UL us
E176177

## Mechanical Dimensions

Mechanical Specification
All Dimensions In Inches (mm)
Tolerances Inches: X.XX= ±0.02 , X.XXX= ±0.010
Millimeters: X.X= ±0.5 , X.XX=±0.25

### SIP Packages

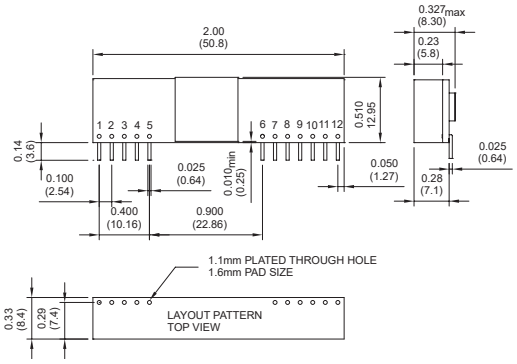


| PIN CONNECTION | |
|---|---|
| PIN | Function |
| 1 | +Output |
| 2 | +Output |
| 3 | +Sense |
| 4 | +Output |
| 5 | Common |
| 6 | NO Pin/PGOOD |
| 7 | Common |
| 8 | +V Input |
| 9 | +V Input |
| 10 | Sequency |
| 11 | Trim |
| 12 | On/Off Control |

### SMT Packages

Bottom View of Board

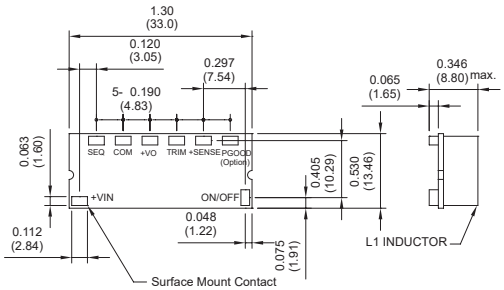


| MODEL NUMBER | INPUT VOLTAGE | OUTPUT VOLTAGE | OUTPUT CURRENT | INPUT CURRENT NO LOAD | INPUT CURRENT FULL LOAD | Efficiency (%) |
|---|---|---|---|---|---|---|
| | 6.0-14 VDC | 0.7525 VDC | 10 A | 40 mA | 762 mA | 82 |
| | 6.0-14 VDC | 1.2 VDC | 10 A | 40 mA | 1149 mA | 87 |
| SIP10W-12S05A | 6.0-14 VDC | 1.5 VDC | 10 A | 50 mA | 1404 mA | 89 |
| | 6.0-14 VDC | 1.8 VDC | 10 A | 50 mA | 1666 mA | 90 |
| SMT10W-12S05A | 6.0-14 VDC | 2.0 VDC | 10 A | 60 mA | 1832 mA | 91 |
| | 6.0-14 VDC | 2.5 VDC | 10 A | 65 mA | 2264 mA | 92 |
| | 6.0-14 VDC | 3.3 VDC | 10 A | 75 mA | 2956 mA | 93 |
| | 6.5-14 VDC | 5.0 VDC | 10 A | 95 mA | 4386 mA | 95 |

## Derating Curve

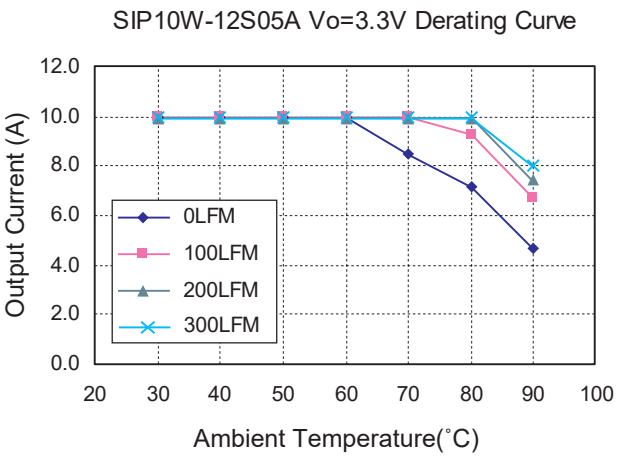


Figure2. Typical Power De-rating for 12Vin

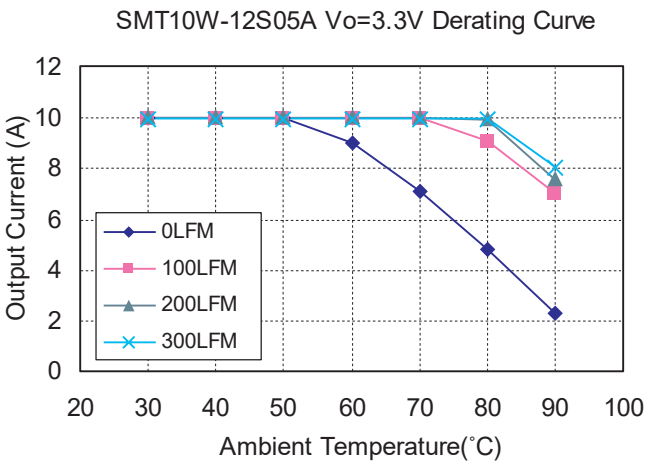


Figure3. Typical Power De-rating for 12Vin

## Specifications

All Specifications Typical At Nominal Line, Full Load, and 25˚C Unless Otherwise Noted

### INPUT SPECIFICATIONS

| | |
|---|---|
| Input Voltage Range | 12V ..... 6.0-14.0V |
| | 12V ..... 6.5-14.0V |
| Under Voltage Lock-out | Power up ..... 5.0V typ. |
| | Power down ..... 4.0V typ. |
| Input Filter Type | Capacitive |
| Positive Remote On/Off Control : | |
| Module On | Open Circuit or = Vin |
| Module Off | < 0.4 Vdc |

### OUTPUT SPECIFICATIONS

| | |
|---|---|
| Voltage Accuracy | ±1.5% max. |
| Transient Response: 25% Step Load Change | < 200µs |
| Ripple and Noise, 20MHz BW (note 3) | 30mV rms max. |
| 75mV pk-pk max. | |
| Temperature Coefficient | ±0.03%/˚C max. |
| Short Circuit Protection | Continuous |
| Line Regulation (note 1) | ±0.2% max. |
| Load Regulation (note 2) | ±0.5% max. |
| External Trim Adj. Range (see Table1) | Vo=0.75-5.0Vdc |
| Sequencing Slew Rate Capability (dVSEQ/dt) | 0.1-1.0V/msec |
| Sequencing Delay Time | 10msec min. |
| Tracking Accuracy | Power up: 200mV max., |
| | Power down: 400mV max. |
| Capacitive Load Low ESR | 8000µF max. |
| Power Good Signal Asserted Logic High | Vo=90%-110%Vo, nom |
| Start up time | 7ms typ. |

### GENERAL SPECIFICATIONS

| | |
|---|---|
| Efficiency | See Table |
| Isolation Voltage | Non-isolation |
| Switching Frequency | 300KHz typ. |
| Over Temperature Protection | 130˚C typ. |
| Operating Ambient Temperature Range | -40˚C to +85˚C |
| Power De-rating Curve | see Figure2, 3 |
| Storage Temperature Range | -55˚C to +125˚C |
| MTBF ..... MIL-STD-217F, GB, 25˚C, Full Load | 0.92Mhrs typ. |
| Dimensions: | SIP Package: 2.00 x 0.510 x 0.327 inches |
| | (50.8 x 12.95 x 8.30 mm) |
| | SMT Package: 1.30 x 0.530 x 0.346 inches |
| | (33.0 x 13.46 x 8.80 mm) |
| Structure | Non-potted With Open Frame Type |
| Weight | 8.5 g |

### NOTE

1. Measured from high line to low line, Vo,set=3.3VDC.
2. Measured from full load to zero load, Vo,set=3.3VDC.
3. The output noise is measured with 10µf tantalum capacitor and 1µf ceramic capacitor across output.
4. The input terminal recommend to parallel with 100µF capacitor ESR< 100mΩ to reduce the input ripple voltage.
5. Suffix "N" to the model number with negative logic remote On/Off
   Model On.....open circuit or < 0.4VDC
   Module Off.....>+2.8VDC to Vin
6. Suffix "P" to the model number with power good function.

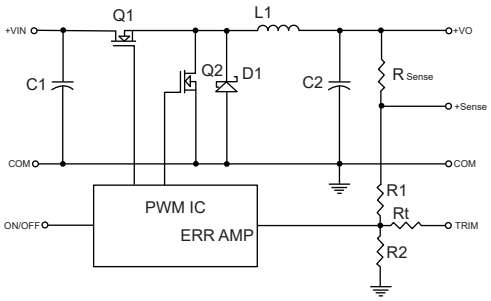


Figure 1.Simplified Schematic

| Vo,set(V) | Rtrim (K˜) |
|---|---|
| 0.75 | Open |
| 1.2 | 22.33 |
| 1.5 | 13.0 |
| 1.8 | 9.0 |
| 2.0 | 7.4 |
| 2.5 | 5.0 |
| 3.3 | 3.12 |
| 5.0 | 1.47 |

Table 1.Suffix “A” to the model number External Resistor Values for programming output voltage

# SIPSMT15-05 SERIES
## 15 AMP, POL CONVERTERS

### Features

- Non-Isolated POL Converter
- SIP / SMT Converter
- Output Current 15AMP
- Input Voltage Range 3-5.5VDC
- Output Voltage Range 0.9-3.63VDC
- 300KHz Switching Frequency
- High Efficiency to 94%
- Over Temperature Protection
- Continuous Short Circuit Protection
- Remote On/Off Control
- UL/C-UL60950 Certified

c UL us
E176177

### Mechanical Dimensions

Mechanical Specification
All Dimensions In Inches (mm)
Tolerances Inches: X.XX= ±0.02 , X.XXX= ±0.010
Millimeters: X.X= ±0.5 , X.XX=±0.25

#### SIP Packages

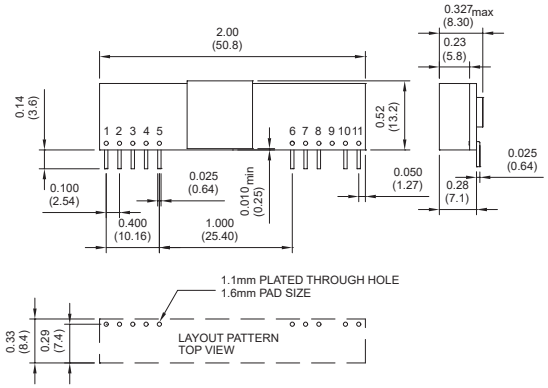


| PIN CONNECTION | |
|---|---|
| PIN | Function |
| 1 | +Output |
| 2 | +Output |
| 3 | +Sense |
| 4 | +Output |
| 5 | Common |
| 6 | Common |
| 7 | +V Input |
| 8 | +V Input |
| 9 | No Pin |
| 10 | Trim |
| 11 | On/Off Control |

#### SMT Packages

Bottom View of Board

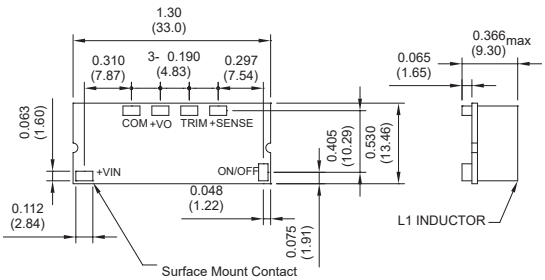


| MODEL NUMBER | INPUT VOLTAGE | OUTPUT VOLTAGE | OUTPUT CURRENT | INPUT CURRENT NO LOAD | INPUT CURRENT FULL LOAD | Efficiency (%) |
|---|---|---|---|---|---|---|
| | 3.0-5.5 VDC | 1.0 VDC | 15 A | 60 mA | 3.658 A | 82 |
| | 3.0-5.5 VDC | 1.2 VDC | 15 A | 60 mA | 4.286 A | 84 |
| SIP15-05S33A | 3.0-5.5 VDC | 1.5 VDC | 15 A | 60 mA | 5.172 A | 87 |
| SMT15-05S33A | 3.0-5.5 VDC | 1.8 VDC | 15 A | 70 mA | 6.136 A | 88 |
| | 3.0-5.5 VDC | 2.0 VDC | 15 A | 70 mA | 6.742 A | 89 |
| | 3.0-5.5 VDC | 2.5 VDC | 15 A | 70 mA | 8.152 A | 92 |
| | 4.5-5.5 VDC | 3.3 VDC | 15 A | 70 mA | 10.532 A | 94 |

## Derating Curve

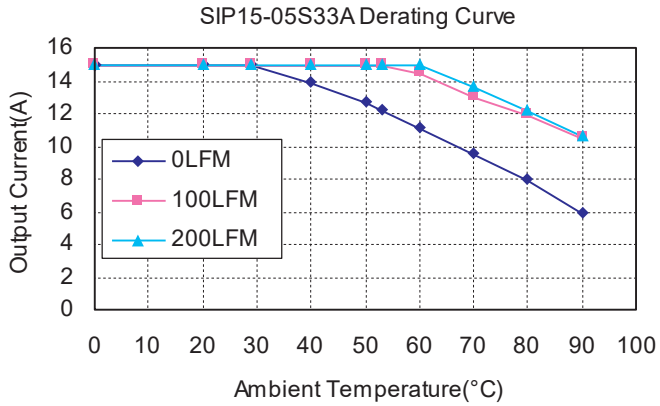


Figure2. Typical Power De-rating for 5Vin

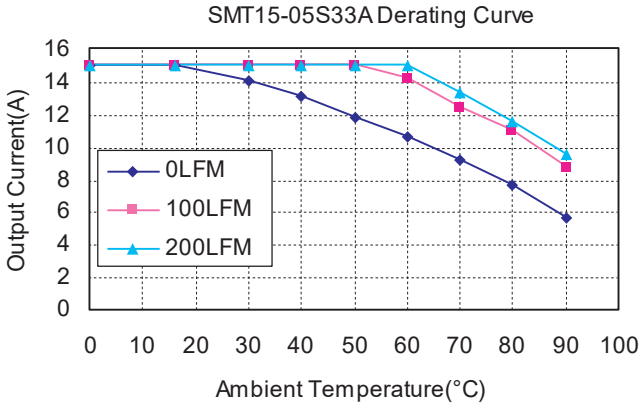


Figure3. Typical Power De-rating for 5Vin

## Specifications

All Specifications Typical At Nominal Line, Full Load, and 25˚C Unless Otherwise Noted

### INPUT SPECIFICATIONS

| | |
|---|---|
| Input Voltage Range | Vo, set ≦ Vin-0.5VDC |
| | 5V ..... 3.0-5.5V |
| Under Voltage Lock-out | Power up ..... 2.8V typ. |
| | Power down ..... 2.7V typ. |
| Input Filter Type | Capacitive |
| Positive Remote On/Off Control: | |
| Module On | Open Circuit or = Vin |
| Module Off | < 0.4Vdc |

### OUTPUT SPECIFICATIONS

| | |
|---|---|
| Voltage Accuracy | ±1.5% max. |
| Transient Response: 25% Step Load Change | < 200µs |
| Ripple and Noise, 20MHz BW (note 3) | 20mVrms max. |
| | 50mVpk-pk max. |
| Temperature Coefficient | ±0.03%/˚C max. |
| Short Circuit Protection | Continuous |
| Line Regulation (note 1) | SIP15-05S33A .... ±0.2% max. |
| | SMT15-05S33A .. ±0.4% max. |
| Load Regulation (note 2) | ±0.5% max. |
| Capacitive Load Low ESR | 10000µF max. |
| External Trim Adj. Range (see Table1) | Vo=0.9-3.63Vdc |
| Start up time | 4.5ms typ. |

### GENERAL SPECIFICATIONS

| | |
|---|---|
| Efficiency | See Table |
| Isolation Voltage | Non-isolation |
| Switching Frequency | 300KHz typ. |
| Over Temperature Protection | 120˚C typ. |
| Operating Ambient Temperature Range | -40˚C to +85˚C |
| Power De-rating Curve | see Figure2, 3 |
| Storage Temperature Range | -55˚C to +125˚C |
| MTBF ..... MIL-STD-217F, GB, 25˚C, Full Load | 1.5Mhrs typ. |
| Dimensions: | SIP Package: 2.00 x 0.327 x 0.52 inches (50.8 x 8.3 x 13.2 mm) |
| | SMT Package: 1.30 x 0.53 x 0.366 inches (33.0 x 13.46 x 9.30 mm) |
| Structure | Non-potted With Open Frame Type |
| Weight | 6.8 g |

### NOTE

1. Measured from high line to low line, Vo, set=1.8VDC.
2. Measured from full load to zero load, Vo, set=3.3VDC.
3. The output noise is measured with 10µf tantalum capacitor and 1µf ceramic capacitor across output.
4. The input terminal recommend to parallel with 100µF capacitor ESR< 20mΩ to reduce the input ripple voltage.
5. Suffix "N" to the model number with negative logic remote On/Off
   Model On ..... open circuit or < 0.4VDC
   Module Off ..... >+2.8VDC to Vin

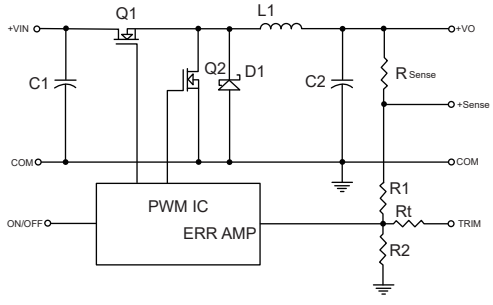


Figure 1.Simplified Schematic

| Vo,set(V) | Rtrim (K˜) |
|---|---|
| 0.75 | Open |
| 1.2 | 22.33 |
| 1.5 | 13.0 |
| 1.8 | 9.0 |
| 2.0 | 7.4 |
| 2.5 | 5.0 |
| 3.3 | 3.12 |
| 5.0 | 1.47 |

Table 1.External Resistor Values for programming out voltage

# SIPSMT16-12 SERIES
## 16 AMP, POL CONVERTERS

### Features

- Non-Isolated POL Converter
- SIP / SMT Converter
- Output Current 16AMP
- Input Voltage Range 9.0 –14VDC
- Output Voltage Range 0.75 – 5.0VDC
- 300KHz Switching Frequency
- High Efficiency to 94%
- Over Temperature Protection
- Continuous Short Circuit Protection
- Remote On/Off Control
- UL/C-UL60950 Certified

c UL us
E176177

### Mechanical Dimensions

Mechanical Specification
All Dimensions In Inches (mm)
Tolerances Inches: X.XX= ±0.02 , X.XXX= ±0.010
Millimeters: X.X= ±0.5 , X.XX=±0.25

### SIP Packages

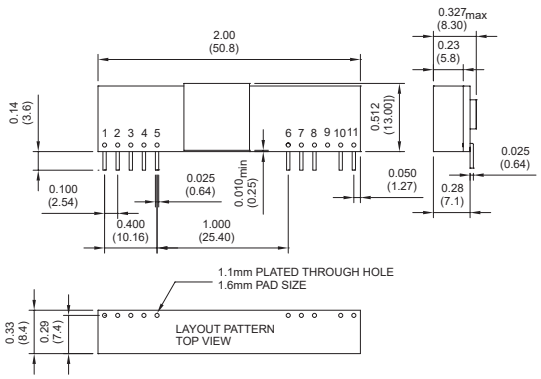


| PIN CONNECTION | |
|---|---|
| PIN | Function |
| 1 | +Output |
| 2 | +Output |
| 3 | +Sense |
| 4 | +Output |
| 5 | Common |
| 6 | Common |
| 7 | +V Input |
| 8 | +V Input |
| 9 | No Pin |
| 10 | Trim |
| 11 | On/Off Control |

### SMT Packages

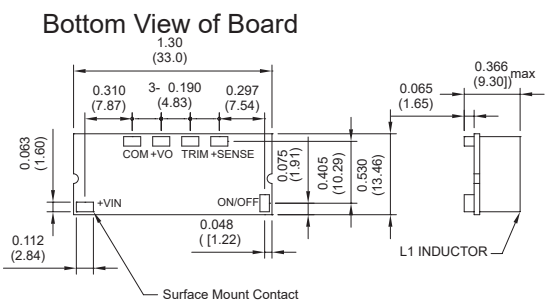


| MODEL NUMBER | INPUT VOLTAGE | OUTPUT VOLTAGE | OUTPUT CURRENT | INPUT CURRENT NO LOAD | INPUT CURRENT FULL LOAD | Efficiency (%) |
|---|---|---|---|---|---|---|
| | 9.0-14 VDC | 0.75 VDC | 16 A | 40 mA | 1299 mA | 77 |
| | 9.0-14 VDC | 1.2 VDC | 16 A | 50 mA | 1928 mA | 83 |
| SIP16-12S05A | 9.0-14 VDC | 1.5 VDC | 16 A | 50 mA | 2326 mA | 86 |
| | 9.0-14 VDC | 1.8 VDC | 16 A | 60 mA | 2727 mA | 88 |
| SMT16-12S05A | 9.0-14 VDC | 2.0 VDC | 16 A | 60 mA | 2996 mA | 89 |
| | 9.0-14 VDC | 2.5 VDC | 16 A | 65 mA | 3704 mA | 90 |
| | 9.0-14 VDC | 3.3 VDC | 16 A | 75 mA | 4783 mA | 92 |
| | 9.0-14 VDC | 5.0 VDC | 16 A | 75 mA | 7092 mA | 94 |

## Derating Curve

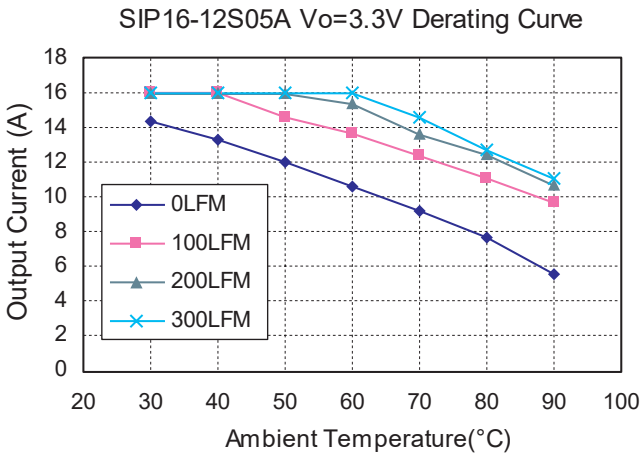


Figure2. Typical Power De-rating for 12Vin

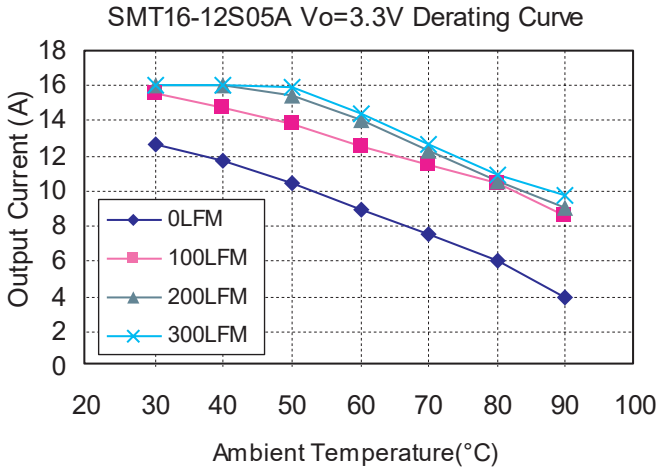


Figure3. Typical Power De-rating for 12Vin

## Specifications

All Specifications Typical At Nominal Line, Full Load, and 25˚C Unless Otherwise Noted

### INPUT SPECIFICATIONS

| | |
|---|---|
| Input Voltage Range | 12V ..... 9.0-14V |
| Under Voltage Lock-out | Power up ..... 8.0V typ. |
| | Power down ..... 7.7V typ. |
| Input Filter Type | Capacitive |
| Positive Remote On/Off Control: | |
| Module On | Open Circuit or =Vin |
| Module Off | < 0.4Vdc |

### OUTPUT SPECIFICATIONS

| | |
|---|---|
| Voltage Accuracy | ±1.5% max. |
| Transient Response: 25% Step Load Change | < 200µs |
| Ripple and Noise, 20MHz BW (note 3) | 30mVrms max. |
| | 75mVpk-pk max. |
| Temperature Coefficient | ±0.03%/˚C max. |
| Short Circuit Protection | Continuous |
| Line Regulation (note 1) | ±0.2% max. |
| Load Regulation (note 2) | ±0.5% max. |
| Capacitive Load Low ESR | 8000µF max. |
| External Trim Adj. Range (see Table1) | Vo=0.75-5.0Vdc |
| Start up time | 7ms typ. |

### GENERAL SPECIFICATIONS

| | |
|---|---|
| Efficiency | See Table |
| Isolation Voltage | Non-isolation |
| Switching Frequency | 300KHz typ. |
| Over Temperature Protection | 130˚C typ. |
| Operating Ambient Temperature Range | -40˚C to +85˚C |
| Power Derating Curve | see Figure2, 3 |
| Storage Temperature Range | -55˚C to +125˚C |
| MTBF ..... MIL-STD-217F, GB, 25˚C, Full Load | 0.98Mhrs typ. |
| Dimensions: | |
| SIP Package: | 2.00 x 0.512 x 0.327 inches |
| | (50.8 x 13.00 x 8.30 mm) |
| SMT Package: | 1.30 x 0.530 x 0.366 inches |
| | (33.0 x 13.46 x 9.30 mm) |
| Structure | Non-potted With Open Frame Type |
| Weight | 10 g |

### NOTE

1. Measured from high line to low line, Vo,set=3.3VDC.
2. Measured from full load to zero load, Vo,set=3.3VDC.
3. The output noise is measured with 10µf tantalum capacitor and 1µf ceramic capacitor across output.
4. The input terminal recommend to parallel with 100µF capacitor ESR< 100mΩ to reduce the input ripple voltage.
5. Suffix "N" to the model number with negative logic remote On/Off
   Model On ..... open circuit or < 0.4VDC
   Module Off..... >+2.8VDC to Vin

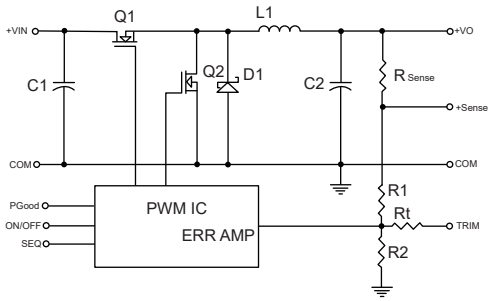


Figure 1.Simplified Schematic

| Vo,set(V) | Rtrim (K˜) |
|---|---|
| 0.7575 | Open |
| 1.2 | 22.46 |
| 1.5 | 13.05 |
| 1.8 | 9.024 |
| 2.0 | 7.417 |
| 2.5 | 5.009 |
| 3.3 | 3.122 |
| 5.0 | 1.472 |

Table 1.External Resistor Values for programming out voltage

# SIPSMT16W-12 SERIES
## 16 AMP, POL CONVERTERS

## Features

- Non-Isolated POL Converter
- SIP / SMT Package
- Output Current 16AMP
- Input Voltage Range 6.0-14VDC
- Output Voltage Range 0.7525-5.0VDC
- 300KHz Switching Frequency
- High Efficiency to 94%
- Over Temperature Protection
- Continuous Short Circuit Protection
- Remote On/Off Control
- Output Voltage Sequencing
- Power Good Signal
- UL/C-UL60950 Certified

c UL us
E176177

## Mechanical Dimensions

Mechanical Specification
All Dimensions in Inches (mm)
Tolerance Inches: X.XX=±0.02 , X.XXX=±0.010
Millimeters: X.X=±0.5 , X.XX=±0.25

### SIP Packages

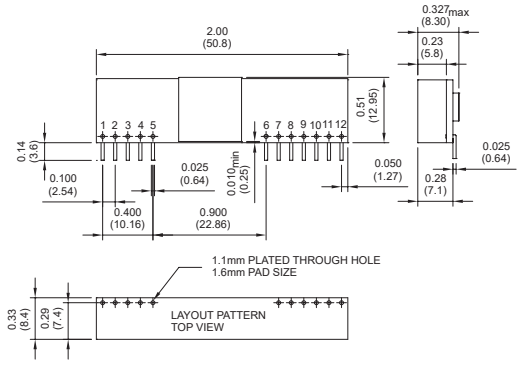


| PIN CONNECTION | |
|---|---|
| PIN | Function |
| 1 | +Output |
| 2 | +Output |
| 3 | +Sense |
| 4 | +Output |
| 5 | Common |
| 6 | No Pin/PGOOD |
| 7 | Common |
| 8 | +V Input |
| 9 | +V Input |
| 10 | Sequency |
| 11 | Trim |
| 12 | On/Off Control |

### SMT Packages

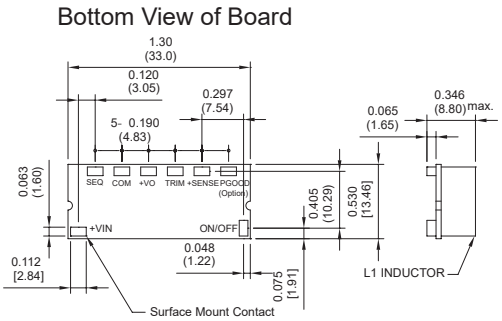


| MODEL NUMBER | INPUT VOLTAGE | OUTPUT VOLTAGE | OUTPUT CURRENT | INPUT CURRENT NO LOAD | INPUT CURRENT FULL LOAD | Efficiency (%) |
|---|---|---|---|---|---|---|
| | 6.0-14 VDC | 0.7525 VDC | 16 A | 40 mA | 1250 mA | 80 |
| | 6.0-14 VDC | 1.2 VDC | 16 A | 40 mA | 1882 mA | 85 |
| SIP16W-12S05A | 6.0-14 VDC | 1.5 VDC | 16 A | 50 mA | 2273 mA | 88 |
| | 6.0-14 VDC | 1.8 VDC | 16 A | 60 mA | 2697 mA | 89 |
| SMT16W-12S05A | 6.0-14 VDC | 2.0 VDC | 16 A | 60 mA | 2963 mA | 90 |
| | 6.0-14 VDC | 2.5 VDC | 16 A | 65 mA | 3663 mA | 91 |
| | 6.0-14 VDC | 3.3 VDC | 16 A | 75 mA | 4731 mA | 93 |
| | 6.5-14 VDC | 5.0 VDC | 16 A | 95 mA | 7092 mA | 94 |

## Derating Curve

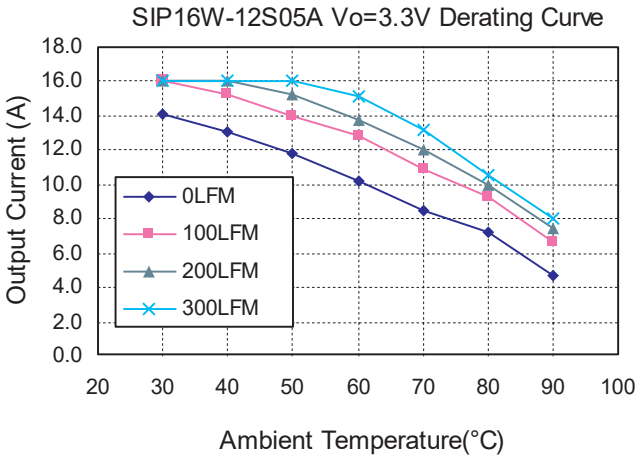


Figure2. Typical Power De-rating for 12Vin

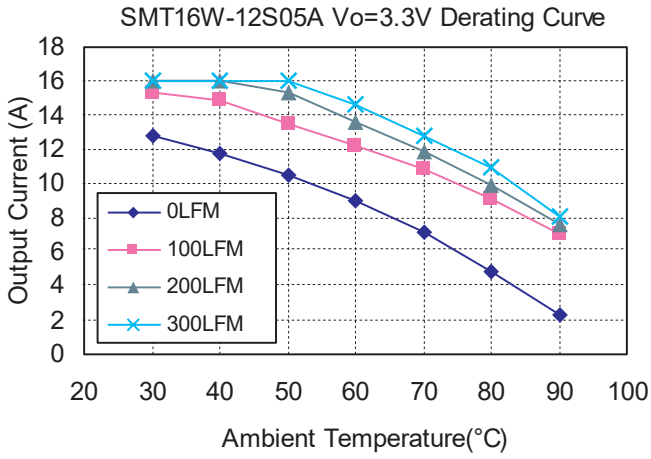


Figure3. Typical Power De-rating for 12Vin

## Specifications

All Specifications Typical At Nominal Line, Full Load, and 25˚C Unless Otherwise Noted

### INPUT SPECIFICATIONS

| | |
|---|---|
| Input Voltage Range | 12V ..... 6.0-14.0V |
| | 12V ..... 6.5-14.0V |
| Under Voltage Lock-out | Power up ..... 5.0V typ. |
| | Power down ..... 4.0V typ. |
| Input Filter Type | Capacitive |
| Positive Remote On/Off Control : | |
| Module On | Open Circuit or = Vin |
| Module Off | < 0.4 Vdc |

### OUTPUT SPECIFICATIONS

| | |
|---|---|
| Voltage Accuracy | ±1.5% max. |
| Transient Response: 25% Step Load Change | < 200µs |
| Ripple and Noise, 20MHz BW (note 3) | 30mV rms max. |
| | 75mV pk-pk max. |
| Temperature Coefficient | ±0.03%/˚C max. |
| Short Circuit Protection | Continuous |
| Line Regulation (note 1) | ±0.2% max. |
| Load Regulation (note 2) | ±0.5% max. |
| External Trim Adj. Range (see Table1) | Vo=0.75-5.0Vdc |
| Sequencing Slew Rate Capability ($dV_{SEQ}/dt$) | 0.1-1.0V/msec |
| Sequencing Delay Time | 10msec min. |
| Tracking Accuracy | Power up: 200mV max., |
| | Power down: 400mV max. |
| Capacitive Load Low ESR | 8000µF max. |
| Power Good Signal Asserted Logic High | Vo=90%-110%Vo, nom. |
| Start up time | 7ms typ. |

### GENERAL SPECIFICATIONS

| | |
|---|---|
| Efficiency | See Table |
| Isolation Voltage | Non-isolation |
| Switching Frequency | 300KHz typ. |
| Over Temperature Protection | 130˚C typ. |
| Operating Ambient Temperature Range | -40˚C to +85˚C |
| Power Derating Curve | see Figure2, 3 |
| Storage Temperature Range | -55˚C to +125˚C |
| MTBF ..... MIL-STD-217F, GB, 25˚C, Full Load | 0.92Mhrs typ. |
| Dimensions: | |
| SIP Package: | 2 x 0.51 x 0.327 inches |
| | (50.8 x 12.95 x 8.3 mm) |
| SMT Package: | 1.3 x 0.53 x 0.346 inches |
| | (33.0 x 13.46 x 8.8 mm) |
| Structure | Non-potted With Open Frame Type |
| Weight | 8.5 g |

### NOTE

1. Measured from high line to low line, Vo,set=3.3VDC.
2. Measured from full load to zero load, Vo,set=3.3VDC.
3. The output noise is measured with 10µf tantalum capacitor and 1µf ceramic capacitor across output.
4. The input terminal recommend to parallel with 100µF capacitor ESR< 100mΩ to reduce the input ripple voltage.
5. Suffix "N" to the model number with negative logic remote On/Off
   Model On ..... Open Circuit or < 0.4VDC
   Module Off ..... >+2.8VDC to Vin
6. Suffix "P" to the model number with power good function.

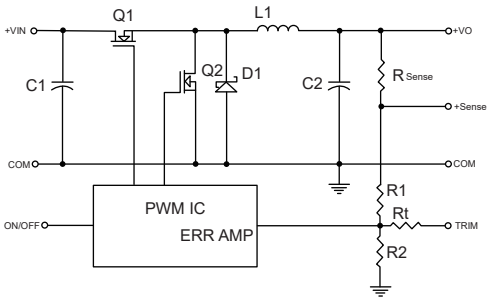


Figure 1.Simplified Schematic

| Vo,set(V) | Rtrim (K˜) |
|---|---|
| 0.75 | Open |
| 1.2 | 22.33 |
| 1.5 | 13.0 |
| 1.8 | 9.0 |
| 2.0 | 7.4 |
| 2.5 | 5.0 |
| 3.3 | 3.12 |
| 5.0 | 1.47 |

Table 1.External Resistor Values for programming out voltage

# SIP20W-12 SERIES
## 20 AMP, POL CONVERTERS

### Features

- Non-Isolated POL Converter
- SIP Package
- Output Current 20AMP
- Input Voltage Range 6-14VDC
- Output Voltage Range 0.7525-5VDC
- 300KHz Switching Frequency
- High Efficiency to 94%
- Over Temperature Protection
- Continuous Short Circuit Protection
- Remote On/Off Control
- Output Voltage Sequencing
- Power Good Signal
- UL/C-UL60950 Certified

c UL us
E176177

### Mechanical Dimensions

Mechanical Specification
All Dimensions in Inches (mm)
Tolerance Inches: X.XX=±0.02 , X.XXX=±0.010
Millimeters: X.X=±0.5 , X.XX=±0.25

### SIP Packages

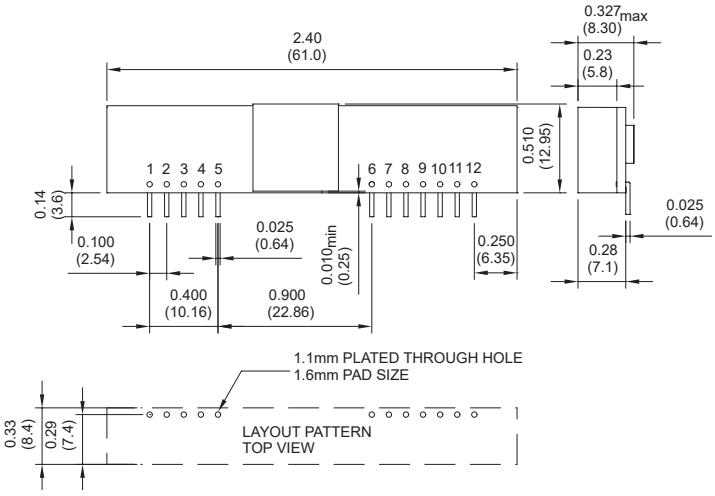


| PIN CONNECTION | |
|---|---|
| PIN | Function |
| 1 | +Output |
| 2 | +Output |
| 3 | +Sense |
| 4 | +Output |
| 5 | Common |
| 6 | No Pin/PGOOD |
| 7 | Common |
| 8 | +V Input |
| 9 | +V Input |
| 10 | Sequency |
| 11 | Trim |
| 12 | On/Off Control |

| MODEL NUMBER | INPUT VOLTAGE | OUTPUT VOLTAGE | OUTPUT CURRENT | INPUT CURRENT | | Efficiency (%) |
|---|---|---|---|---|---|---|
| | | | | NO LOAD | FULL LOAD | |
| SIP20W-12S05A | 6.0-14 VDC | 0.7525 VDC | 20 A | 40 mA | 1603 mA | 78 |
| | 6.0-14 VDC | 1.2 VDC | 20 A | 50 mA | 2381 mA | 84 |
| | 6.0-14 VDC | 1.5 VDC | 20 A | 50 mA | 2874 mA | 87 |
| | 6.0-14 VDC | 1.8 VDC | 20 A | 50 mA | 3409 mA | 88 |
| | 6.0-14 VDC | 2.0 VDC | 20 A | 60 mA | 3745 mA | 89 |
| | 6.0-14 VDC | 2.5 VDC | 20 A | 65 mA | 4630 mA | 90 |
| | 6.0-14 VDC | 3.3 VDC | 20 A | 75 mA | 5978 mA | 92 |
| | 6.5-14 VDC | 5.0 VDC | 20 A | 95 mA | 8865 mA | 94 |

## Derating Curve

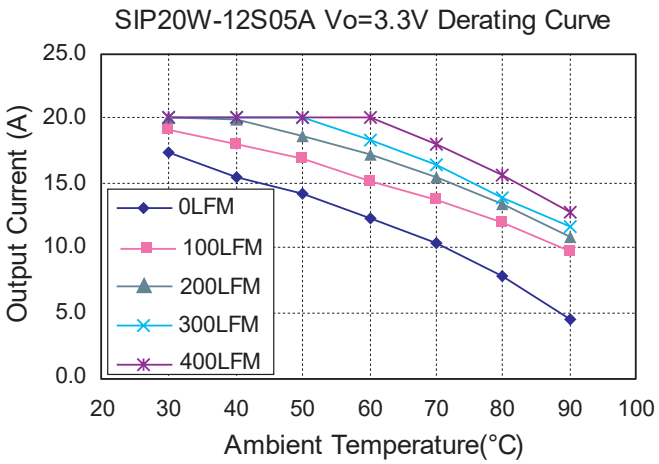


Figure2. Typical Power De-rating for 12Vin

## Specifications

All Specifications Typical At Nominal Line, Full Load, and 25˚C Unless Otherwise Noted

### INPUT SPECIFICATIONS

| | |
|---|---|
| Input Voltage Range | 12V ..... 6.0-14.0V |
| | 12V ..... 6.5-14.0V |
| Under Voltage Lock-out | Power up ..... 5.0V typ. |
| | Power down ..... 4.0V typ. |
| Input Filter Type | Capacitive |
| Positive Remote On/Off Control : | |
| Module On | Open Circuit or = Vin |
| Module Off | < 0.4 Vdc |

### OUTPUT SPECIFICATIONS

| | |
|---|---|
| Voltage Accuracy | ±1.5% max. |
| Transient Response: 25% Step Load Change | < 200µs |
| Ripple and Noise, 20MHz BW (note 3) | 30mV rms max. |
| | 75mV pk-pk max. |
| Temperature Coefficient | ±0.03%/C max. |
| Short Circuit Protection | Continuous |
| Line Regulation (note 1) SIP Package | ±0.2% max. |
| Load Regulation (note 2) | ±0.5% max. |
| External Trim Adj. Range (see Table1) | Vo=0.75-5.0Vdc |
| Sequencing Slew Rate Capability ($dV_{SEQ}/dt$) | 0.1-1.0V/msec |
| Sequencing Delay Time | 10msec min. |
| Tracking Accuracy | Power up: 200mV max., |
| | Power down: 400mV max. |
| Capacitive Load Low ESR | 8000µF max. |
| Power Good Signal Asserted Logic High | Vo=90%-110%Vo, nom. |
| Start up time | 7ms typ. |

### GENERAL SPECIFICATIONS

| | |
|---|---|
| Efficiency | See Table |
| Isolation Voltage | Non-isolation |
| Switching Frequency | 300KHz typ. |
| Over Temperature Protection | 130˚C typ. |
| Operating Ambient Temperature Range | -40˚C to +85˚C |
| Power Derating Curve | see Figure2, 3 |
| Storage Temperature Range | -55˚C to +125˚C |
| MTBF ..... MIL-STD-217F, GB, 25˚C, Full Load | 0.9Mhrs typ. |
| Dimensions: | |
| SIP Package: | 2.40 x 0.510 x 0.327 inches |
| | (61.0 x 12.95 x 8.30 mm) |
| Structure | Non-potted With Open Frame Type |
| Weight | 11 g |

### NOTE

1. Measured from high line to low line, Vo,set=3.3VDC.
2. Measured from full load to zero load, Vo,set=3.3VDC.
3. The output noise is measured with 10µf tantalum capacitor and 1µf ceramic capacitor across output.
4. The input terminal recommend to parallel with 200µF capacitor ESR< 25mΩ to reduce the input ripple voltage.
5. Suffix "N" to the model number with negative logic remote On/Off
   Model On ..... Open Circuit or < 0.4VDC
   Module Off ..... >+2.8VDC to Vin
6. Suffix "P" to the model number with power good function.

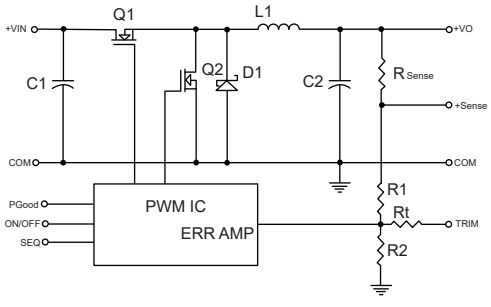


Figure 1.Simplified Schematic

| Vo,set(V) | Rtrim (K˜) |
|---|---|
| 0.7575 | Open |
| 1.2 | 22.46 |
| 1.5 | 13.05 |
| 1.8 | 9.024 |
| 2.0 | 7.417 |
| 2.5 | 5.009 |
| 3.3 | 3.122 |
| 5.0 | 1.472 |

Table 1.External Resistor Values for programming out voltage

# Rapid Standard-Modification, Value Added & Customized Power Supplies. Cincon offers a high degree of flexibility in product designs.

Cincon provides a broad range of standard products that address the needs of many applications, there are occasions when a standard product doesn't address all your application requirements.

By years of experience in developing our customers with solutions on demand, do not hesitate to talk to Cincon to obtain your preferred products.

## POWER SUPPLY - REQUEST FOR QUOTE - by fax +886 2 2702 9852

Company _____ Date _____

First Name _____ Last Name _____

Country _____ City _____

Address _____

Telephone _____ Fax _____

E-mail _____

| | |
|---|---|
| Product Type | Application |
| Output Voltages | Output Currents |
| Input Voltages | Efficiency |
| Isolation | Protection |

Storage / Operating Temperature Range

| | |
|---|---|
| Safety Standard | EMC Standard |

Mechanical Description

Remarks

**Cincon Headquarters**
14F, No. 306, Section 4, Hsin Yi Rd., Taipei, Taiwan
Tel: (886-2) 2708-6210
E-mail: sales@cincon.com.tw

**Cincon USA**
1655 Mesa Verde Ave, Ste 180
Ventura, CA 93003 USA
Tel: (805) 639-3350
E-mail: info@cincon.com

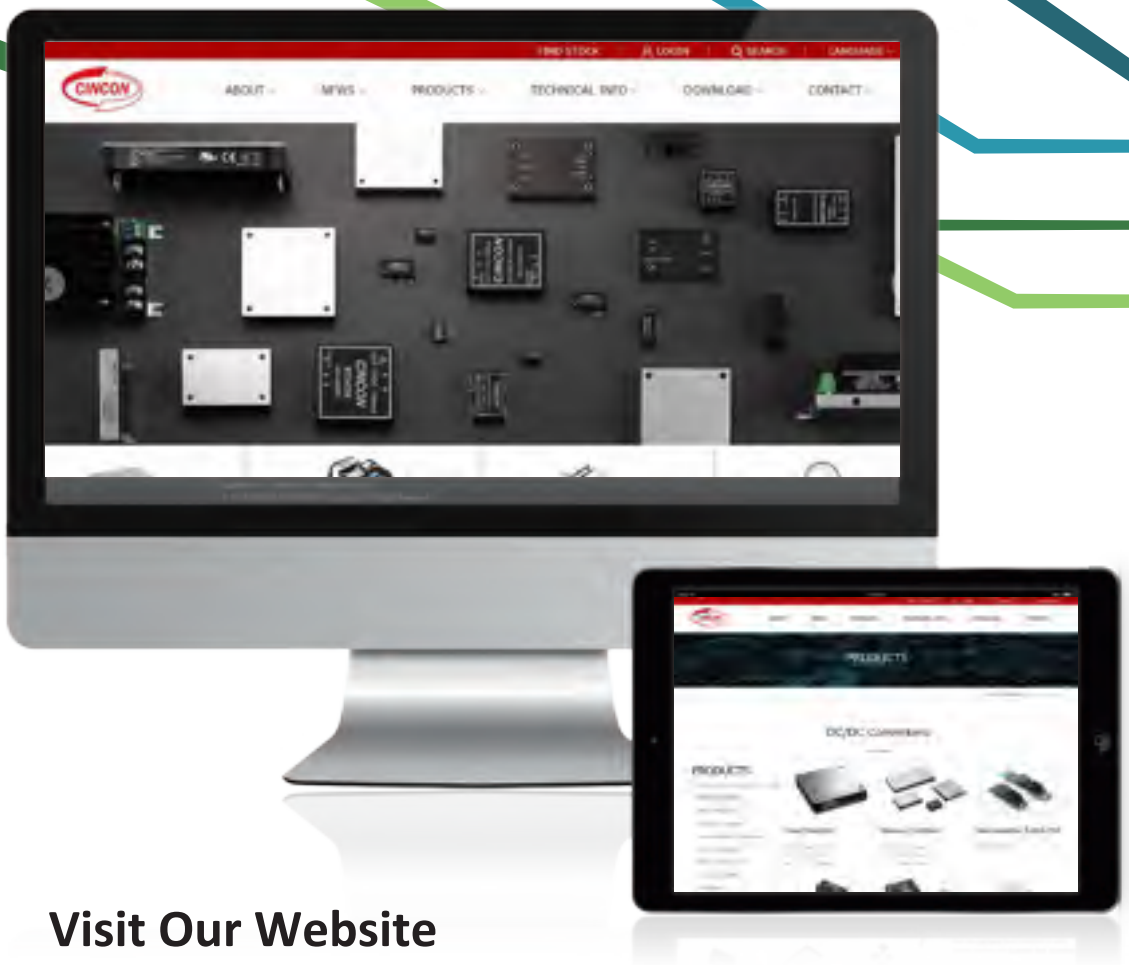


## Visit Our Website
## WWW.CINCON.COM

### On Cincon Website

- ✓ You can download latest datasheets & application notes
- ✓ You can find all new product releases and latest news
- ✓ You can find Cincon sales representa ve & distributors
- ✓ You can check stock and send product inquiry to us

# Let Cincon Power Your Idea

WWW.CINCON.COM

**CINCON HEADQUARTERS**
14F , No. 306, Section 4, Hsin Yi Road Taipei, Taiwan, R.O.C.
Tel : (886-2) 2708-6210 | Fax : (886-2) 2702-9852
E-mail : sales@cincon.com.tw

**CINCON USA**
1655 Mesa Verde Ave, Ste 180 Ventura , CA 93003 USA
Tel : (805) 639-3350 | Fax : (805) 639-4101
E-mail : info@cincon.com