Datasheet

OPMM-1616-XT

Diamond Systems

Our company network supports you worldwide with offices in Germany, Austria, Switzerland, Great Britain and the USA. For more information please contact:

FORTEC Elektronik AG
Hauptniederlassung
Lechwiesenstr. 9
86899 Landsberg am Lech

Telefon: +49 (0) 8191 91172-0
Telefax: +49 (0) 8191 21770
E-Mail: sales@fortecag.de
Internet: www.fortecag.de

FORTEC Elektronik AG
Büro West
Hohenstaufenring 55
50674 Köln

Telefon: +49 (0) 221 272 273-0
Telefax: +49 (0) 221 272 273-10
E-Mail: west@fortecag.de
Internet: www.fortecag.de

FORTEC Elektronik AG
Büro Wien
Nuschinggasse 12
A-1230 Wien

Telefon: +43 1 8673492-0
Telefax: +43 1 8673492-26
E-Mail: office@fortec.at
Internet: www.fortec.at

ALTRAC AG
(Tochter der FORTEC):
Bahnhofstraße 3
CH-5436 Würenlos

Telefon: +41 (0) 44 7446111
Telefax: +41 (0) 44 7446161
E-Mail: info@altrac.ch
Internet: www.altrac.ch

Opal-MM-1616-XT™

DIAMOND SYSTEMS

Rugged Optoisolated PC/104™ I/O Module

With 16 Unidirectional Inputs and 16 Relay Outputs

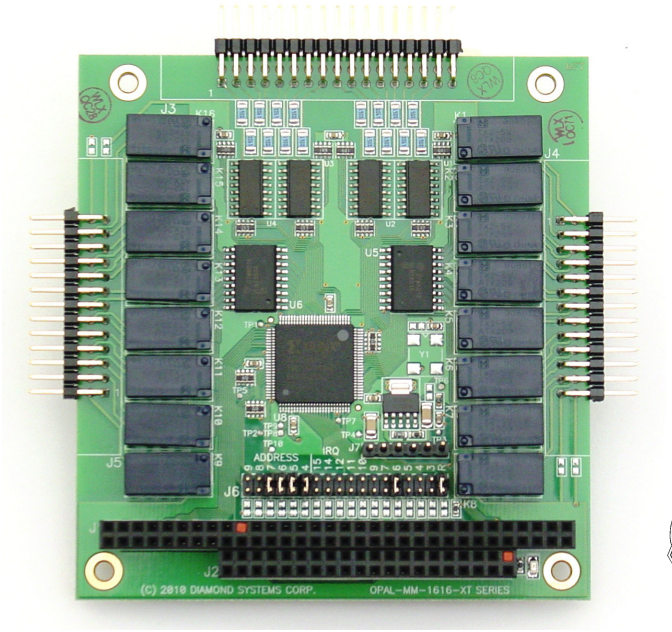

Key Features

- 16 unidirectional optoisolated inputs with current limiting resistors
  - 30VDC input capacity
  - Programmable edge detection with interrupts
- 16 Form C SPDT relay outputs
  - 2A current capacity
  - 30VDC/30W switching capacity
- +5VDC input
- PC/104 form factor module
- Low-noise design
- Extremely rugged -40°C to +85°C operating temperature
- Universal Driver software included

Highly Advanced Optoisolated Inputs

Opal-MM-1616-XT offers 16 unidirectional optoisolated inputs that can accept DC voltages up to 30VDC. Inputs feature channel-to-channel and input-to-output isolation of 500V DC or AC. A programmable edge detection circuit can generate interrupts on any change of an input.

Reliable Relay Outputs

OPMM-1616-XT features 16 Form C SPDT relay outputs with 30VDC at 2A capacity (30W maximum). Each relay is highly reliable with a long lifetime of 10M operations.

Rugged Design

Extended temperature operation of -40°C to +85°C is tested and guaranteed. The OPMM-1616-XT also uses ceramic capacitors for durability in high altitudes or other harsh environments. Optional 0-ohm resistors may be requested instead of the address jumpers for additional ruggedness, and optional latching connectors may be used for both inputs and outputs to further improve reliability.

Shortened Development Time

Diamond's advanced Universal Driver software is included at no charge. It provides a programming library to simplify control of the board's features and enable you to develop your application software quickly.

OPMM-1616-XT: Opto Input and Relay Output PC/104 Module

DIAMOND SYSTEMS

SPECIFICATIONS

INPUTS	
Number of inputs	16 unidirectional optoisolated inputs
Input capacity	30VDC with current limiting resistors
Logic levels	Logic 0: 0 - 1.5VDC Logic 1: 3 - 30VDC
Programmability	Programmable edge detection with interrupts
OUTPUTS	
Number of outputs	16 relay outputs
Relay contacts	SPDT (Form C) contacts
Current capacity	2A
Switching capacity	30VDC at 2A (30W maximum) 125VAC at 0.1A reistive (50VA maximum)
Contact resistance	50mohm maximum
Actuation time	Operate: 5ms maximum Release: 5ms maximum
Relay lifetime	10M operations
MISCELLANEOUS	
Input voltage	+5VDC ±10%
Current consumption	70mA typical, additional 28mA per activated relay
Isolation (all I/O)	500VDC or AC channel-to-channel
Bus interface	PC/104 (ISA) bus
Form factor	PC/104 (3.55" x 3.775")
Operating temperature	-40°C to +85°C (-40°F to +185°F)
Weight	3.4oz (96g)
RoHS	Compliant

Product Overview

The OPMM-1616-XT features 16 optoisolated digital inputs. The inputs are unidirectional and accept DC voltages up to 30VDC. An input voltage in the range of 0-1.5V will result in a logic low indication, and an input voltage in the range of 3-30V will result in a logic high indication. Inputs feature channel to channel and input to output isolation of 500V DC or AC. The components, layout, and trace spacing are designed to support this isolation rating. The inputs also feature a programmable edge detection circuit (change of state detection circuit) that can generate interrupts on any change on any input.

The module also features 16 DPDT (form C) relays with 30VDC at 2A (30W maximum resistive) capacity. Each relay has a lifetime of 10,000,000 operations. When the board is powered off or the relay is de-energized, the C contact is connected to the NC contact, and when the relay is energized, the C contact is connected to the NO contact.

Provision is made for two external sources for a system clock for the CPLD, either the ISA bus 8MHz clock (Connector J1 pin B20) or an on-board 10MHz oscillator. The clock is only needed for the edge detection circuit on the inputs; the remaining logic may operate asynchronously without a clock. In normal configuration, the ISA bus clock is routed to the CPLD via a resistor and the 10MHz oscillator is not installed.

The OPMM-1616-XT interfaces to the PC/104 ISA bus using an 8-bit I/O interface controlled by a CPLD. The module occupies 8 bytes in I/O space. Its base address is selected with 6 jumpers that select 1 or 0 for address bits SA9-4. The design also includes an interrupt circuit for generating ISA bus IRQs.

OPAL-MM BLOCK DIAGRAM

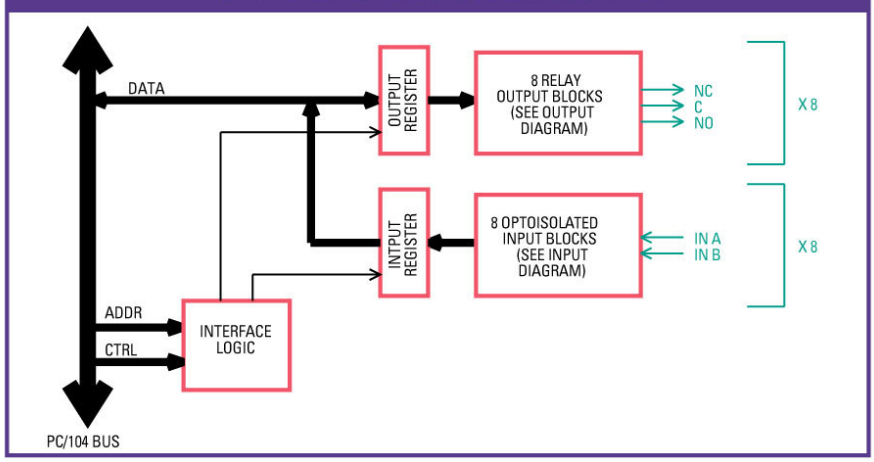

ORDERING INFORMATION

OPMM-1616-XT	Optoisolated Input and Relay Outpout PC
C-26-18	Dual 26-pin connector ribbon cable
C-34-18	34-pin connector ribbon cable

Our company network supports you worldwide with offices in Germany, Austria, Switzerland, Great Britain and the USA. For more information please contact:

FORTEC Elektronik AG
Hauptniederlassung
Lechwiesenstr. 9
86899 Landsberg am Lech

Telefon: +49 (0) 8191 91172-0
Telefax: +49 (0) 8191 21770
E-Mail: sales@fortecag.de
Internet: www.fortecag.de

FORTEC Elektronik AG
Büro West
Hohenstaufenring 55
50674 Köln

Telefon: +49 (0) 221 272 273-0
Telefax: +49 (0) 221 272 273-10
E-Mail: west@fortecag.de
Internet: www.fortecag.de

FORTEC Elektronik AG
Büro Wien
Nuschinggasse 12
A-1230 Wien

Telefon: +43 1 8673492-0
Telefax: +43 1 8673492-26
E-Mail: office@fortec.at
Internet: www.fortec.at

ALTRAC AG
(Tochter der Fortec AG):
Bahnhofstraße 3
CH-5436 Würenlos

Telefon: +41 (0) 44 7446111
Telefax: +41 (0) 44 7446161
E-Mail: info@altrac.ch
Internet: www.altrac.ch

Members of the FORTEC Group: