FORTEC
ELEKTRONIK AG

Datasheet

Advantech

ARK-3520P/L

Fanless industrial Embedded BOX PC with 6th Gen. Mobile Intel® Core® i7/i5/i3 Prozessor

The information contained in this document has been carefully researched and is, to the best of our knowledge, accurate. However, we assume no liability for any product failures or damages, immediate or consequential, resulting from the use of the information provided herein. Our products are not intended for use in systems in which failures of product could result in personal injury. All trademarks mentioned herein are property of their respective owners. All specifications are subject to change without notice.

ARK-3520P

6th Gen. Intel® Core™ i3/ i5/ i7 with Expansion slots and wide range power Fanless Box PC

Windows Embedded WISE-PaaS/RMM iManager CE FCC RoHS

Features

- Intel® Core™ i3/i5/i7 processor (BGA)
- Triple independent display: VGA + HDMI + Option Display
- DDR4 SO-DIMM memory up to 32 GB
- Flexible Expansion via PCI/PCIex4
- 9-36V wide range Power input
- Versatile I/Os including 6 x high speed USB 3.0 and 8 x COM ports
- 2 Removable 2.5" HDD drive bay
- Advantech iDoor module compatible

Specifications

Processor System	CPU	Intel Core i7-6820EQ	Intel Core i5-6440EQ	Intel Core i3-6100E (support by T-P/N)
	Frequency	2.8 GHz (Quad Core)	2.7 GHz (Quad Core)	2.7 GHz (Dual Core)
	L3 Cache	8 MB	6 MB	3 MB
	Watts	45W	45W	35W
	System Chipset	Intel QM170		
	BIOS	AMI EFI 128Mbit		
Memory	Technology	DDR4 2133 MHz		
	Max. Capacity	32 GB		
	Socket	2 x 260-pin SO-DIMM		
Graphics	Chipset	Intel QM170 Integrated GFX Gen 9		
	Graphic Engine	Direct x 12, OpenGL 4.4 HW Encode: H.265/HEVC, H.264/MPEG-4 AVC, MPEG-2, JPEG/MJPEG and VP8. HW Decode: H.265/HEVC, H.264/MPEG-4 AVC, MPEG-2, VC-1/WMV9, JPEG/MJPEG, VP8 and VP9		
	VGA	1920x1200@ 60Hz		
	HDMI	1 HDMI port, HDMI 1.4b for HD video playback, 3840x2160@30Hz		
	Optional 3rd Display module	DVI-D / DP / HDMI Display Port		
	Triple Display	VGA+HDMI + 3rd display module		
Ethernet	LAN1	10/100/1000 Mbps Intel I219-LM GbE, support Wake On Lan		
	LAN2	10/100/1000 Mbps Intel I210 GbE, support Wake On Lan		
Audio	Interface	Realtek ALC888S, High Definition Audio, Line-out, Mic-in		
Others	Watch dog Timer	255-level timer interval, setup by software		
	TPM	TPM 2.0 (Optional by project support)		
I/O Interface	Serial Port	4 x RS-232 ports, 4 x RS-232/422/485 port with auto flow control; COM 1,2 support 5V/12V power supply (by jumper)		
	USB	6 x USB 3.0 ports; 2 x USB 2.0 ports		
	DIO	16 bit DIO		
	P/S2	1 Port support by cable and bracket (Optional)		
	Parallel Port	D-sub 25pin connector (Optional)		
Expansions	Mini PCIe	2 x Full-size Mini PCIe (1 x support mSATA, 1 x support SIM holder)		
	M.2	1 x E key for WiFi		
	i Door	1 set (Optional)		
	Add-on Card Slot	2 Slots PCI (Default) Maximum card size: 110 mm (H) x 180 mm(L) 2 Slots PCIe x 4 (Optional) Maximum card size: 110 mm (H) x 180 mm(L) Suggest maximum power consumption 10W for each slot		
Storage	HDD	Two removable 2.5" SATA HDD Bays with maximum device height 15mm, SATA III, Gen 3, Support SATA RAID 0, 1		
	mSATA	1x mSATA socket (Share 1 Mini PCIe)		
Software Support	Microsoft Windows	Windows 10, Windows 8.1, Windows 7		
	Linux	By Project Support		
Power Requirements	Power Type	AT/ATX		
	Power Input Voltage	9 ~ 36 V_{DC}		
	Power Adapter	AC to DC, 150W (Optional)		
Power Consumption	Typical	11.4W		
	Max.	68.4W	46.5W	42.75W
Mechanical	Construction	Aluminum housing		
	Mounting	Desk/wall-mounting		
	Dimensions (W x H x D)	220 x 101 x 233 mm (8.66" x 3.98" x 9.17")		
	Weight	4.4 kg (9.7 lb)		
Environment	Operating Temperature	with extended temp peripherals: -20 ~ 60° C with 0.7m/s air flow with HDD: 0 ~ 40° C with 0.7m/s air flow		
	Storage Temperature	-40 ~ 85° C		
	Relative Humidity	95% @ 40° C (non-condensing)		
	Vibration During Operation	With SSD: 3 Grms, IEC 60068-2-64, random, 5 ~ 500 Hz, 1 hr/axis.		
	Shock During Operation	With SSD: 30 G, IEC 60068-2-27, half sine, 11 ms duration		
	EMC	CE/FCC Class A, CCC, BSMI		
	Safety	LVD, CCC, BSMI		

* By Project Support

All product specifications are subject to change without notice.

Last updated : 16-May-2017

Dimensions

Unit: mm

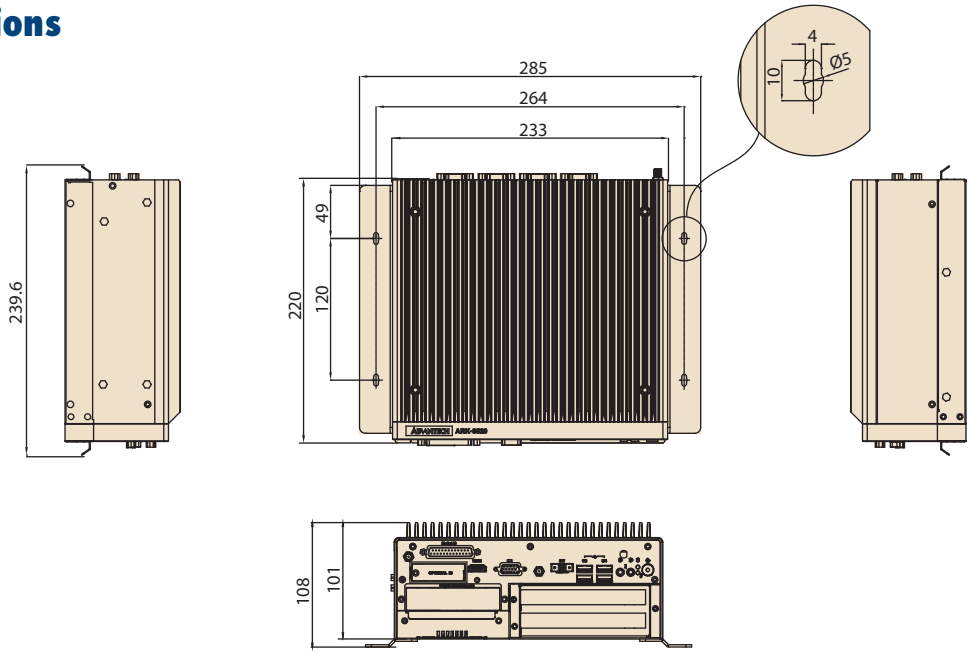

Front Panel External I/O Mechanical Layout/Drawing

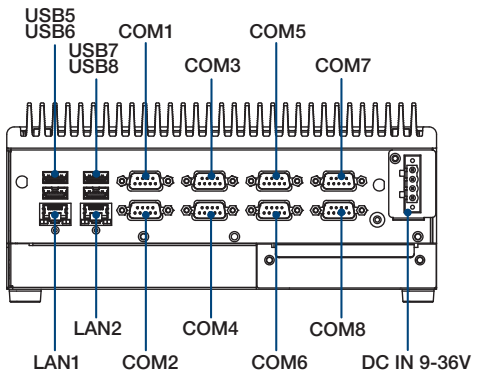

Rear Panel External I/O Mechanical Layout/Drawing

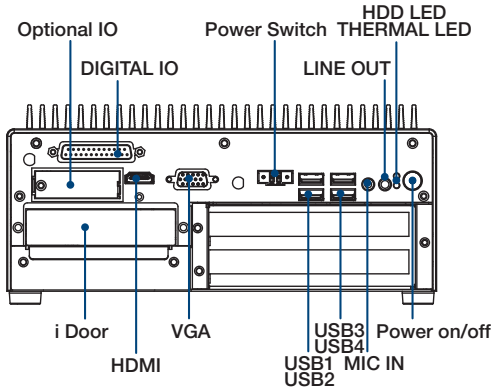

Ordering Information

Part No.	CPU	DDR4	VGA	HDMI	Option 3rd display module	RS-232/ 422/485	RS-232	USB 3.0	USB 2.0	MiniPCIe	SIM	DC input	Expansion
ARK-3520P-U8A1E	i7-6820EQ	up to 32G	1	1	1	4	4	6	2	2	1	9 ~ 36 V	2 x PCI
ARK-3520P-U7A1E	i5-6440EQ	up to 32G	1	1	1	4	4	6	2	2	1	9 ~ 36 V	2 x PCI

Note: Memory, storage and operating system bundled by request.

* ARK-3520P i3-6100E support by T-PN with MOQ 30pcs

Packing List

Part Number	Description
-	ARK-3520 Unit
-	User Manual (Simplified Chinese)
-	China RoHS
1652003234	4 pin DC in terminal block
-	2 pin power switch terminal block
1960075470N031	2 x mounting bracket

Embedded OS

Part Number	Description
2070014628	WES7E 64bit EN/JP/TC/SC
2070014627	WE8.1 64bit IndustryPro EN/JP/TC/SC
2070014899	Win10 Ent X64 (High End) for i7-6820EQ
2070014898	Win10 Ent X64 (Value) for i5-6440EQ

ARK-3520 Default SKU Option Items

Optional Item for Default SKU

Part Number	Description
96PSA-A150W19P4-1	AC-to-DC Adapter, DC19V 150W, 0 ~ 40° C for Home and Office Use
96PSA-A220W24P4-1	AC to DC Adapter, DC 24V 220W, -20 ~ 60° C
1702002600	Power cable 3-pin 183cm, USA type
1702002605	Power cable 3-pin 183cm, EU type
1702031801	Power cable 3-pin 183cm, UK type
1700000237	Power cable, 3-Pin 183cm, PSE type

Optional MOS modules for iDoor Expansion

Part Number	Description
MOS-2230-Z1201E	CANBus module, 2-Ch, USB I/F
MOS-2220-X1101E	Parallel LPT module, 1-Ch, USB I/F.
MOS-2220-Z1101E	High Speed Serial COM module, 1-ch, USB I/F
MOS-2120-Z1101E	Giga LAN Ethernet module, 1-Ch, PCIe I/F.
MOS-1120Y-0201E	Isolated RS-232, 2-Ch, DB9, PCIe I/F
MOS-1121Y-0201E	Isolated RS-422/485, 2-Ch, DB9, PCIe I/F
MOS-1120Y-1401E	Non-Isolated RS-232, DB37, 4-Ch, PCIe I/F
MOS-1121Y-1401E	Non-Isolated RS-422/485, DB37, 4-Ch, PCIe I/F
MOS-1130Y-0201E	Isolated CANBus, 2-Ch, DB9, PCIe I/F
MOS-1110Y-0101E	Isolated 16 DI/8 DO, 1-Ch, DB37, PCIe I/F
MOS-2110Z-1201E	USB module, 2-Ch, PCIe I/F

*Please noted ARK-3520 can support only 1 iDoor.

Optional Display Module

Part Number	Description
AMO-D001E	DVI-D module (China only)
AMO-D002E	DP module
AMO-D003E	HDMI module (China only)

Optional Riser Expansion

Part Number	Description
AMO-R022E	2 x PCIe x 4

ARK-3520L

6th Gen. Intel® Core™ i3/ i5/ i7 Modular Expansion Fanless Box PC

Features

- 6th Gen. Intel® Core™ i3/i5/i7 mobile processor (BGA)
- Triple independent display: VGA + HDMI + Optional Display
- DDR4 SO-DIMM memory support up to 32 GB
- Option 9-36V power module compatible with all-in-one ordering
- Optional modular design for 2.5" hard drive bays : internal /removable (support up to 2 sets)
- Advantech iDoor module compatible
- Advantech EMIO miniPCIe module compatible with all-in-one ordering
- Advantech ARK Plus AMO-3xxx series module compatible

Specifications

Processor System	CPU	Intel Core i7-6820EQ	Intel Core i5-6440EQ	Intel Core i3-6100E (support by T-P/N)
	Frequency	2.8 GHz (Quad Core)	2.7 GHz (Quad Core)	2.7 GHz (Dual Core)
	L3 Cache	8 MB	6 MB	3 MB
	Watts	45W	45W	35W
	System Chipset	Intel QM170		
	BIOS	AMI EFI 128Mbit		
Memory	Technology	DDR4 2133 MHz		
	Max. Capacity	32 GB		
	Socket	2 x 260-pin SO-DIMM		
Graphics	Chipset	Intel QM170 Integrated GFX Gen 9		
	Graphic Engine	Direct x 12, OpenGL 4.4 HW Encode: H.265/HEVC, H.264/MPEG-4 AVC, MPEG-2, JPEG/MJPEG and VP8. HW Decode: H.265/HEVC, H.264/MPEG-4 AVC, MPEG-2, VC-1/WMV9, JPEG/MJPEG, VP8 and VP9		
	VGA	1920x1200@ 60Hz		
	HDMI	1 HDMI port, HDMI 1.4b for HD video playback, 3840x2160@30Hz		
	Optional 3rd Display module	DVI-D / DP / HDMI Display Port		
	Triple Display	VGA+HDMI + 3rd display module		
Ethernet	LAN1	10/100/1000 Mbps Intel I219-LM GbE, support Wake On Lan		
	LAN2	10/100/1000 Mbps Intel I210 GbE, support Wake On Lan		
Audio	Interface	Realtek ALC888S, High Definition Audio, Line-out, Mic-in		
Others	Watch dog Timer	255-level timer interval, setup by software		
	TPM	TPM 2.0 (Optional by project support)		
I/O Interface	Serial Port	4 x RS-232 ports, 4 x RS-232/422/485 port with auto flow control; COM 1,2 support 5V/12V power supply (by jumper)		
	USB	6 x USB 3.0 ports; 2 x USB 2.0 ports		
	DIO	16 bit DIO		
	P/S2	1 Port support by cable and bracket (Optional)		
	Parallel Port	D-sub 25pin connector (Optional)		
Expansions	Mini PCIe	2 x Full-size Mini PCIe (1 x support mSATA, 1 x support SIM holder)		
	M.2	1 x E key for WiFi		
	i Door	1 set (Optional)		
	ARK Plus	AMO-3501E 3 Slot Riser Card for 2x PCI+1xPCIx4		
Storage	HDD	1 x 2.5" SATAIII HDD Bay with Max Height 15mm, (1 internal 2.5" HDD Bay with one optional removable HDD Bay)		
	mSATA	1 x mSATA socket (Share 1 Mini PCIe)		
Software Support	Microsoft Windows	Windows 10, Windows 8.1, Windows 7		
	Linux	By Project Support		
Power Requirements	Power Type	AT/ATX		
	Power Input Voltage	12V (9-36V as optional)		
	Power Adapter	AC to DC, 150W (Optional)		
Power Consumption	Typical	11.4W		
	Max.	68.4W	46.5W	42.75W
Mechanical	Construction	Aluminum housing		
	Mounting	Desk/wall-mounting		
	Dimensions (W x H x D)	220 x 101 x 233 mm (8.66" x 3.98" x 9.17")		
	Weight	4.8 kg (10.58 lb)		
Environment	Operating Temperature	with extended temp peripherals: -20 ~ 60° C with 0.7m/s air flow with HDD: 0 ~ 40° C with 0.7m/s air flow		
	Storage Temperature	-40 ~ 85° C		
	Relative Humidity	95% @ 40° C (non-condensing)		
	Vibration During Operation	With SSD: 3 Grms, IEC 60068-2-64, random, 5 ~ 500 Hz, 1 hr/axis.		
	Shock During Operation	With SSD: 30 G, IEC 60068-2-27, half sine, 11 ms duration		
	EMC	CE/FCC Class B, CCC, BSMI		
	Safety	CB, UL, CCC, BSMI		

All product specifications are subject to change without notice.

Dimensions

Unit: mm

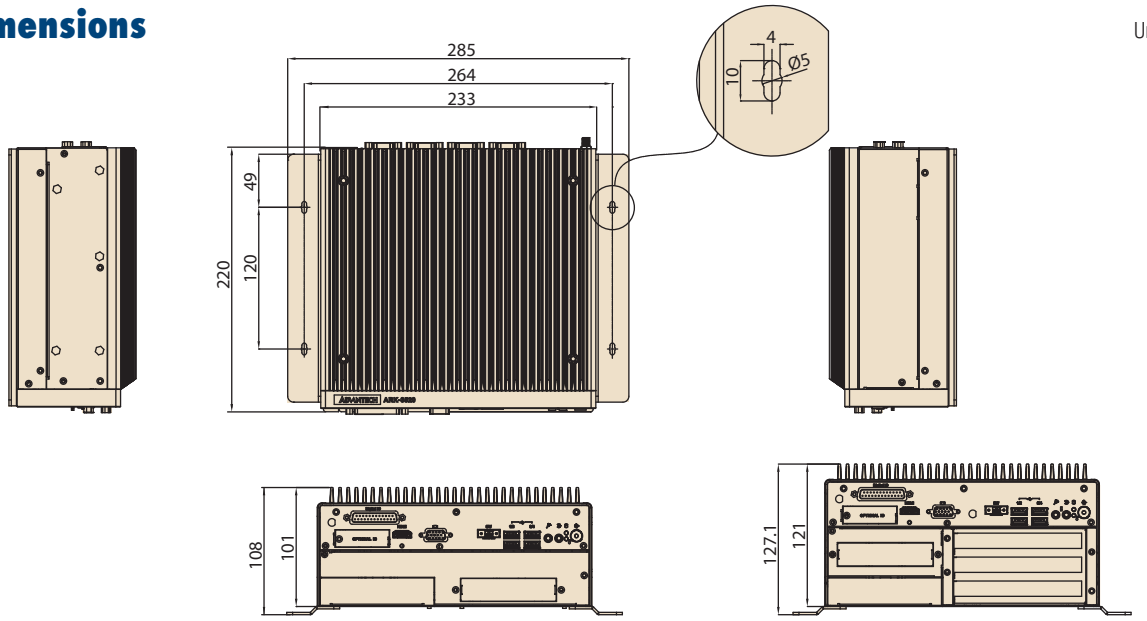

Front Panel External I/O Mechanical Layout/Drawing

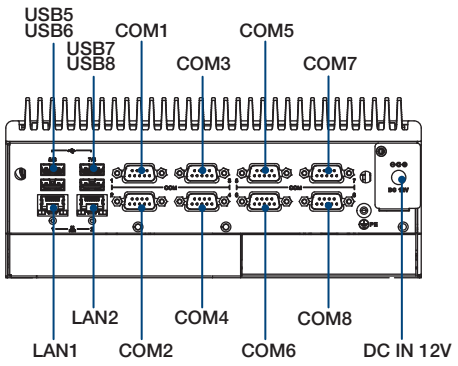

Rear Panel External I/O Mechanical Layout/Drawing

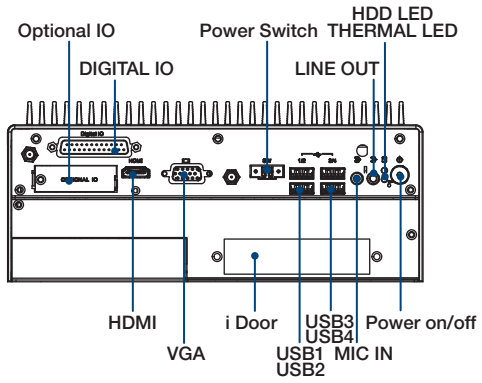

Ordering Information

Part No.	CPU	DDR4	VGA	HDMI	Option 3rd display module	RS-232/ 422/485	RS-232	USB 3.0	USB 2.0	MiniPCIe	SIM	DC input	Expansion
ARK-3520L-U8A1E	i7-6820EQ	up to 32G	1	1	1	4	4	6	2	2	1	12V	Optional
ARK-3520L-U7A1E	i5-6440EQ	up to 32G	1	1	1	4	4	6	2	2	1	12V	Optional

Note: Memory, storage and operating system bundled by request.

* ARK-3520L i3-6100E support by T-PN with MOQ 30pcs

Packing List

Part Number	Description
-	ARK-3520 Unit
-	User Manual (Simplified Chinese)
-	China RoHS
-	2pin power switch terminal block
1960075470N031	2 x mounting bracket

Embedded OS

Part Number	Description
2070014628	WES7E 64bit EN/JP/TC/SC
2070014627	WE8.1 64bit IndustryPro EN/JP/TC/SC
2070014899	Win10 Ent X64 (High End) for i7-6820EQ
2070014898	Win10 Ent X64 (Value) for i5-6440EQ

ARK-3520 Default SKU Option Items

Optional Item for Default SKU

Part Number	Description
XARK-DPS-150AB-15	AC-to-DC Adapter, DC12V 150W
1702002600	Power cable 3-pin 183cm, USA type
1702002605	Power cable 3-pin 183cm, EU type
1702031801	Power cable 3-pin 183cm, UK type
1700000237	Power cable, 3-Pin 183cm, PSE type

Optional MOS modules for iDoor Expansion

Part Number	Description
MOS-2230-Z1201E	CANBus module, 2-Ch, USB I/F
MOS-2220-X1101E	Parallel LPT module, 1-Ch, USB I/F.
MOS-2220-Z1101E	High Speed Com USB module, 2-Ch, PCIe I/F
MOS-2120-Z1101E	Giga LAN Ethernet module, 1-Ch, PCIe I/F.
MOS-1120Y-0201E	Isolated RS-232, 2-Ch, DB9, PCIe I/F
MOS-1121Y-0201E	Isolated RS-422/485, 2-Ch, DB9, PCIe I/F
MOS-1120Y-1401E	Non-Isolated RS-232, DB37, 4-Ch, PCIe I/F
MOS-1121Y-1401E	Non-Isolated RS-422/485, DB37, 4-Ch, PCIe I/F
MOS-1130Y-0201E	Isolated CANBus, 2-Ch, DB9, PCIe I/F
MOS-1110Y-0101E	Isolated 16 DI/8 DO, 1-Ch, DB37, PCIe I/F
MOS-2110Z-1201E	USB module, 2-Ch, PCIe I/F

*Please noted ARK-3520 can support only 1 iDoor.

Optional 9-36V DC Power Module

Part Number	Description
AMO-P010E	9-36V DC input power module for ARK-3520
96PSA-A150W19P4-1	AC-to-DC Adapter, DC19V 150W, 0 ~ 40° C (for AMO-P010E)
96PSA-A220W24P4-1	AC to DC adapter, DC 24V 220W, -20 ~ 60° C (For AMO-P010E)
1702002600	Power cable 3-pin 183cm, USA type
1702002605	Power cable 3-pin 183cm, EU type
1702031801	Power cable 3-pin 183cm, UK type

ARK-3520L Optional HDD expansion Kit (Support up to 2 sets)

Part Number	Description
AMK-A0022E	1 x internal HDD Kit (Max Height 15mm)
AMK-A0023E	1 x removable HDD Kit (Max Height 15mm)

Optional Display Module

Part Number	Description
AMO-D001E	DVI-D module (China only)
AMO-D002E	DP module
AMO-D003E	HDMI module

ARK Plus Extended Modules

AMO-3501E

3 Slots Riser Card Expansion Module: 2 x PCI +1x PCIex4

Specifications

General	
Add on card support	3 Slot for 2xPCI+1xPCIex4 Max Card size: 110 mm(H) x 180 mm (L) Max Power consumption: 10W for each slot
HDD/SSD	NA
Mechanical	
System Dimension	220 x 121 x 230 mm

Ordering Information

P/N	Description
AMO-3501E	3 Slot Riser Card (2xPCI+1xPCIex4)

AMO-3502E

2 Slots Riser Card Expansion Module: 2 x PCI

Specifications

General	
Add on card support	2 Slot for 2xPCI Max Card size: 110 mm(H) x 180 mm (L) Max Power consumption: 10W for each slot
HDD/SSD	NA
Mechanical	
System Dimension	220 x 101 x 230 mm

Ordering Information

P/N	Description
AMO-3502E	2 Slot Riser Card (2xPCI)

AMO-3503E

2 Slots Riser Card Expansion Module: 2 x PCIex4

Specifications

General	
Add on card support	2 Slot for 2xPCIex4 Max Card size: 110 mm(H) x 180 mm (L) Max Power consumption: 10W for each slot
HDD/SSD	NA
Mechanical	
System Dimension	220 x 101 x 230 mm

Ordering Information

P/N	Description
AMO-3503E	2 Slot Riser Card (2xPCIex4)

Our company network supports you worldwide with offices in Germany, Austria, Switzerland, Great Britain and the USA. For more information please contact:

Headquarters

Germany

FORTEC Elektronik AG
Lechwiesenstr. 9
86899 Landsberg am Lech

Phone: +49 8191 91172-0
E-Mail: sales@fortecag.de
Internet: www.fortecag.de

Fortec Group Members

Austria

FORTEC Elektronik AG
Office Vienna
Nuschinggasse 12
1230 Wien

Phone: +43 1 8673492-0
E-Mail: office@fortec.at
Internet: www.fortec.at

Germany

Distec GmbH
Augsburger Str. 2b
82110 Germering

Phone: +49 89 894363-0
E-Mail: info@distec.de
Internet: www.distec.de

Switzerland

ALTRAC AG
Bahnhofstraße 3
5436 Würenlos

Phone: +41 44 7446111
E-Mail: info@altrac.ch
Internet: www.altrac.ch

United Kingdom

Display Technology Ltd.
5 The Oaks Business Village
Revenge Road, Lordswood
Chatham, Kent, ME5 8LF

Phone: +44 1634 672755
E-Mail: info@displaytechnology.co.uk
Internet: www. displaytechnology.co.uk

USA

Apollo Display Technologies, Corp.
87 Raynor Avenue,
Unit 1Ronkonkoma,
NY 11779

Phone: +1 631 5804360
E-Mail: info@apollodisplays.com
Internet: www.apollodisplays.com