FORTEC
ELEKTRONIK AG

Datasheet

ADVANTECH

SOM-7569

COM-Express Mini Computer-on-Module with Apollo Lake

Intel® Atom™ X7-E3950, E3940, E3930 / Celeron® N33580 / N4200 Pentium® Processor,

up to -40 … +85°C (extended Temperature)

The information contained in this document has been carefully researched and is, to the best of our knowledge, accurate. However, we assume no liability for any product failures or damages, immediate or consequential, resulting from the use of the information provided herein. Our products are not intended for use in systems in which failures of product could result in personal injury. All trademarks mentioned herein are property of their respective owners. All specifications are subject to change without notice.

SOM-7569

Intel® Atom™ E3900 & Pentium™ and Celeron™ N Series Processors COM-Express Mini Module

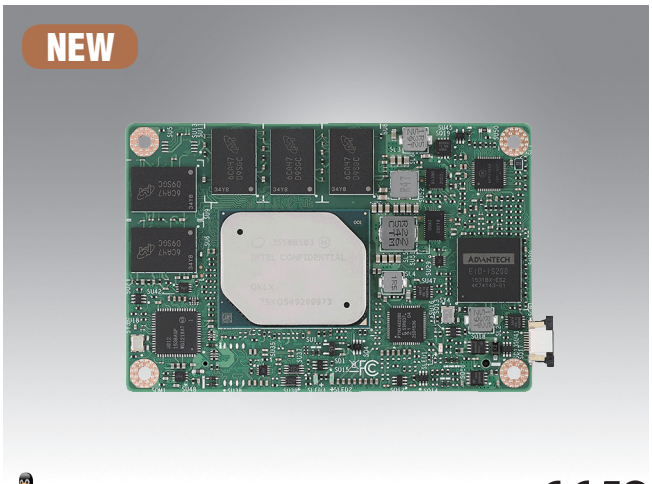

Windows 10

Features

- COM R.2.1 Type 10 Mini Module
- Intel® Atom™ E3900 & Pentium™ and Celeron™ N Series Processors
- Max 8GB DDR3L onboard memory (support ECC, E3900 SKU only)
- Dual Display: LVDS, HDMI/DisplayPort
- onboard eMMC(default 32GB), TPM2.0(B1 version only)
- Supports H.264/AVC, H.265/HEVC, VP9, VP8 HW DECODE
- Supports Wide-range opreating temp.
- iManager and Embedded Software APIs

Software APIs: Watchdog, I²C, SMBus, H/W Monitor, GPIO, Brightness Control

Utilities: BIOS flash, Monitoring, Embedded Security ID

Specifications

Form Factor	Form Factor	COM-Express 2.1				
	Pin-out Type	Mini Module, Type 10 Pin-out				
Processor System	SoC	Atom X7-E3950	Atom X5-E3940	Atom X5-E3930	Pentium N4200	Celeron N3350
	Base Frequency	1.6GHz	1.6GHz	1.3GHz	1.1GHz	1.1GHz
	Burst Frequency	2GHz	1.8GHz	1.8GHz	2.5GHz	2.4GHz
	Core/Thread	4 / 4	4 / 4	2 / 2	4 / 4	2 / 2
	LLC	2MB	2MB	2MB	2MB	2MB
	CPU TDP	12W	9.5W	6.5W	6W	6W
	Chipset	integrated in CPU				
	BIOS	AMI UEFI BIOS @ 64Mb				
Memory	Technology	One channel DDR3L 1866				
	ECC Support	Yes (E3900 SKU only)				
	Max. Capacity	8GB				
	Socket	Onboard DDR				
Graphics	Controller	Intel® HD Graphics 505	Intel® HD Graphics 500	Intel® HD Graphics 500	Intel® HD Graphics 505	Intel® HD Graphics 500
	Graphics Burst Frequency	650MHz	600MHz	550MHz	750MHz	650MHz
	Graphic Memory	Intel DMVT5.0				
	3D/HW Acceleration	DX (9.3, 10, 11.3, 12), OpenGL 4.3, OGL ES 3.0, OpenCL 2.0 HEVC (H.265) @L5, H.264 @ 5.2, MVC, MPEG2, VP8, VP9, VC-1, WMV9,JPEG/MJPEG HW Decode, HEVC (H.265) @L4, H.264@ 5.2, MVC, VP8, VP9, JPEG/MJPEG HW Encode				
Display	LCD (LVDS/eDP)	LVDS: Single-channel 18/24-bit, up to 1366 x 768 eDP: Up to 4096 x 2160 @ 60 Hz				
	DD0 (HDMI/DisplayPort)	HDMI 1.4b: Upto 3840 x 2160 @ 30 Hz DP 1.2: Upto 4096 x 2160 @ 60 Hz				
	Dual Display	LVDS, HDMI/DisplayPort eDP, HDMI/DisplayPort (optional)				
Expansion	PCI Express x1	4 PCIex1, 1PCIex4 (optional)				
	Audio Interface	HD Audio				
	LPC	Yes				
Serial Bus	SMBus	Yes				
	I²C Bus	Yes				
Ethernet	Controller	Intel® i210IT/i210AT				
	Speed	10/100/1000 Mbps				
I/O	SATA	2 Ports, Support Gen 1(1.5 Gb/s) or Gen2 (3 Gb/s) and Gen3.1 (6Gb/s)				
	Onboard Storage	32GB eMMC 5.0 interface				
	USB3.0	2 Ports				
	USB2.0	8 Ports				
	Audio	Intel® HD Audio				
	GPIO	8-bit GPIO				
	SDIO	Optional				
	Watchdog	65536 level, 0 ~ 65535 sec				
	COM Port	2 Ports (2-Wire)				
	Express Card	Yes				
	TPM	TPM2.0 (B1 versoin only)				
	Smart Fan	2 Ports; 1 Port on COM Module. Support 12V Fan, 1 Port on Carrier Board				
Power	Type	ATX, AT				
	Supply Voltage	ATX (Vin 4.75-20V, Vsb 4.75-5.25V) AT (Vin 4.75-20V)				
	Power Consumption (Max.)	Max. 12.886Watt. (N4200), 11.999Watt. (N3350)				
	Power Consumption (Idle)	Idle 2.555Watt.(N4200), 2.783Watt. (N3350)				
Environment	Temperature	Operating: 0 ~ 60 °C (32 ~ 140 °F), Storage: -40 ~ 85 °C (-40 ~ 185 °F) Extend: -40 ~85 °C (-40 ~ 185 °F) (E3900 SKU only)				
	Humidity	Operating: 40 °C @ 95% relative humidity, non-condensing Storage: 60 °C @ 95%relative humidity, non-condensing				
	Vibration Resistance	3.5 Grms				
Mechanical	Dimensions	84 x 55 mm (3.3" x 2.17")				

All product specifications are subject to change without notice.

Last updated: 22-Mar-2018

Block Diagram

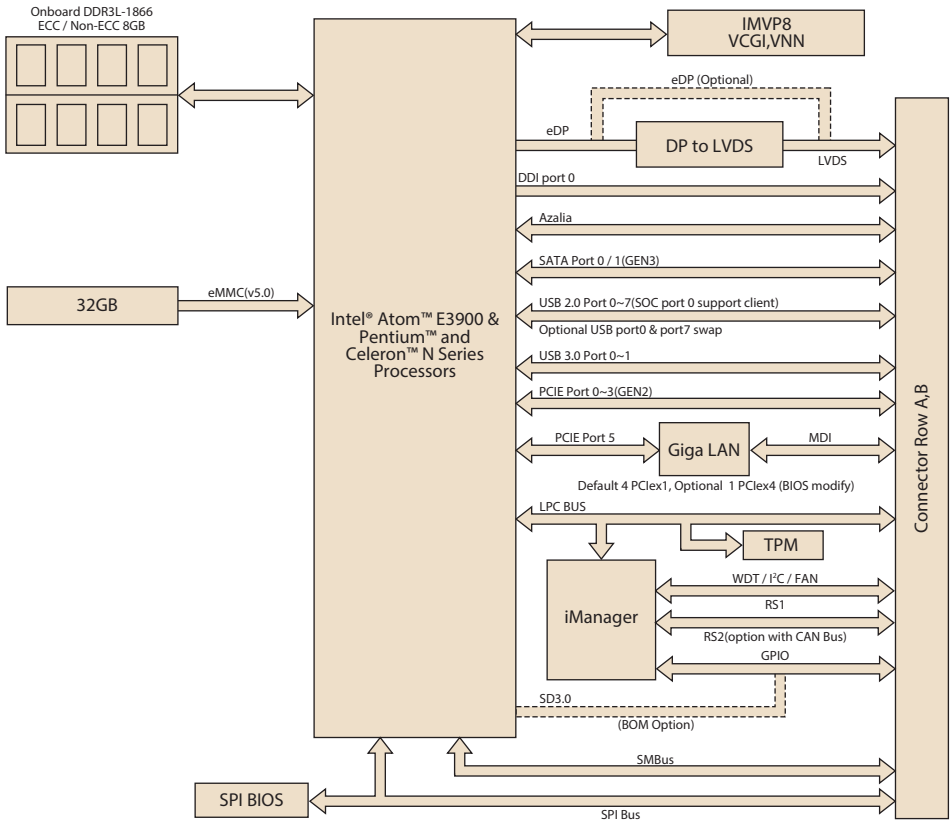

Ordering Information

Part No.	SoC	Base/Burst Freq.	Core	LLC	CPU TDP	Onboard Memory	Onboard Flash	Thermal Solution	Operating Temperature
SOM-7569CM0C-S2A1E	Pentium N4200	1.1GHz / 2.5GHz	4	2MB	6W	4GB / Non-ECC	N/A	Passive	0 ~ 60° C
SOM-7569CM0C-S1A1E	Celeron N3350	1.1GHz / 2.4GHz	2	2MB	6W	4GB / Non-ECC	N/A	Passive	0 ~ 60° C
SOM-7569CCBC-S6A1E	Atom X7-E3950	1.6GHz / 2GHz	4	2MB	12W	4GB / ECC	MLC 32GB	Passive	0 ~ 60° C
SOM-7569CM0C-S5A1E	Atom X5-E3940	1.6GHz / 1.8GHz	4	2MB	9.5W	4GB / ECC	N/A	Passive	0 ~ 60° C
SOM-7569CM0C-S3A1E	Atom X5-E3930	1.3GHz / 1.8GHz	2	2MB	6.5W	4GB / ECC	N/A	Passive	0 ~ 60° C
SOM-7569DCBX-S6A1E	Atom X7-E3950	1.6GHz / 2GHz	4	2MB	12W	8GB / ECC	MLC 32GB	TBC	-40 ~ 85° C
SOM-7569CCBX-S6A1E	Atom X7-E3950	1.6GHz / 2GHz	4	2MB	12W	4GB / ECC	MLC 32GB	TBC	-40 ~ 85° C
SOM-7569CM0X-S5A1E	Atom X5-E3940	1.6GHz / 1.8GHz	4	2MB	9.5W	4GB / ECC	N/A	TBC	-40 ~ 85° C
SOM-7569CM0X-S3A1E	Atom X5-E3930	1.3GHz / 1.8GHz	2	2MB	6.5W	4GB / ECC	N/A	TBC	-40 ~ 85° C

Note: Any other sku or combination is project based support. Please contact sales for details.

Packing List

Part No.	Description	Quantity
-	SOM-7569 CPU Module (N4200, N3350 CPU SKU)	1
1960079608T000	Heatspreader * For N4200, N3350 CPU SKU	1

Part No.	Description	Quantity
-	SOM-7569 CPU Module	1
1960079610T000	Heatspreader (for E3900 SKU)	1
1960079608T000	Heat spreader (for N SKU)	1

Development Board

Part No.	Description
SOM-DB5800-U0A2E	COMe Devel. Board Type10 pint-out Rev. A2

Optional Accessories

Part No.	Description
1960056280N001	Semi-Heatsink 84L x 55W x 13.2H mm (0 ~ 60° C)
96LEDK-I057VG50NA1	5.7" LED PANEL 500N 640X480(G)
96LEDK-A084SV45NB2	8.4" LED PANEL 450N 800X600(G) G084SN05 V9
96LEDK-C150XG40NG1	15" LED PANEL 400N 1024X768(G) G150XGE-L04

Embedded OS

OS	Part Number	Description
Win10	2070015218	img W10 16HL SOM-7569 64b 1701 ENU
Win10	2070015219	img W10 16VL SOM-7569 64b 1701 ENU
Win10	2070015220	img W10 16EL SOM-7569 64b 1701 ENU

Our company network supports you worldwide with offices in Germany, Austria, Switzerland, the UK and the USA. For more information please contact:

Headquarters

Germany

FORTEC Elektronik AG
Augsburger Str. 2b
82110 Germering

Phone: +49 89 894363-0
E-Mail: sales@fortecag.de
Internet: www.fortecag.de

Fortec Group Members

Austria

FORTEC Elektronik AG
Office Vienna
Nuschinggasse 12
1230 Wien

Phone: +43 1 8673492-0
E-Mail: office@fortec.at
Internet: www.fortec.at

Germany

Distec GmbH
Augsburger Str. 2b
82110 Germering

Phone: +49 89 894363-0
E-Mail: info@distec.de
Internet: www.distec.de

FORTEC Elektronik AG
Lechwiesenstraße 9
86899 Landsberg am Lech

Phone: +49 8191 91172-0
E-Mail: sales@fortecag.de
Internet: www.fortecag.de

Switzerland

ALTRAC AG
Bahnhofstraße 3
5436 Würenlos

Phone: +41 44 7446111
E-Mail: info@altrac.ch
Internet: www.altrac.ch

United Kingdom

Display Technology Ltd.
Osprey House, 1 Osprey Court
Hichingbrooke Business Park
Huntingdon, Cambridgeshire, PE29 6FN

Phone: +44 1480 411600
E-Mail: info@displaytechnology.co.uk
Internet: www. displaytechnology.co.uk

USA

Apollo Display Technologies, Corp.
87 Raynor Avenue,
Unit 1Ronkonkoma,
NY 11779

Phone: +1 631 5804360
E-Mail: info@apollodisplays.com
Internet: www.apollodisplays.com